cps-group.com

Powerful Synergies

COPMA

108

HIGH POWER
MODEL

COPMA 108

Performance & Power

108 HAS THE HIGHEST LIFTING RANGE AND TOP POWER-WEIGHT RATIO COMBINING ADVANCED TECHNOLOGY FEATURES FOR MORE PERFORMANCE.

- **HIGH POWER model, load category - 10 Ton/Mt**
- **Essential in design, powerful in performance**
- **Robust arm system**
- **Simple and reliable**
- **Excellent operational safety**

THE MOST POWERFUL CRANE FOR THE TOUGHEST MARKETS

COPMA 108

More Safety & Security

DESIGNED WITH THE HIGHEST HYDRAULIC SYSTEMS AND THE TOUGHEST STRUCTURAL STEEL TO PERFORM THE MAXIMUM LIFTING CAPACITY.

- **Optimized and reliable hydraulic technology**
- **Column with high mechanical characteristics**
- **High Degree of User Friendliness**
- **Efficiency and Reliability thanks to essential design**
- **Excellent weight/performance ratio**

DESIGNED FOR FLEXIBLE SERVICES

COPMA 108

Technical Features

CUTTING EDGE FEATURES FOR MAXIMUM LIFTING POWER,STABILITY AND OPERATIONAL SAFETY IN EVERY WORKING CONDITION.

Standard features

- control — TAD control* / CMS 1.0 control* / CMS 2.0 control* / TES 2.0 control*
- structure — RRP structure

optional features

- easy use — HLS 1.0 easy use / ERD easy use
- control — RRC 2.0 control / RRC 3.0 control

*E.C. market specific equipment

TAD control — Transport Alert Device

Sensors on the basement control the correct closing of the beams and a column switch sensor indicates if the crane is in a folded position, no more than 4 Mt in height. The operator is warned with light and sound signals in the truck cabin.

TES 2.0 control — Truck Electronic Stability 2.0

Active stability control for performance optimization according to the type of stabilization (2) to guarantee maximum safety in all working conditions. Mandatory in the CE market, it helps a better vehicle-crane configuration.

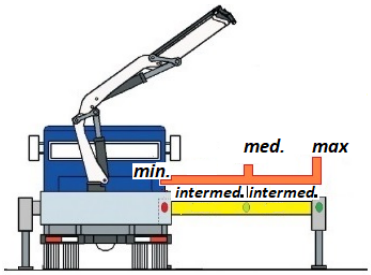

CMS 1.0 control — Crane Monitoring System 1.0

Crane stability control system TES1-TES2, with safety control and overload control for medium-small cranes. Controls the crane in 4 work areas, and each zone can have custom lifting settings depending on the vehicle stability.

CMS 2.0 control — Crane Monitoring System 2.0

Crane stability control system TES2-TES3 with safety and overload controls and HPVE lifting speed management.
Active control on 4-8 working areas according to the model and vehicle stability requirements.

RRP structure — Rotation Rack Pinion

The rotation system with rack and pinion is the best optimal solution for the most performative lifting capacity, it reduce the weights and crane dimension for the most compact configuration.

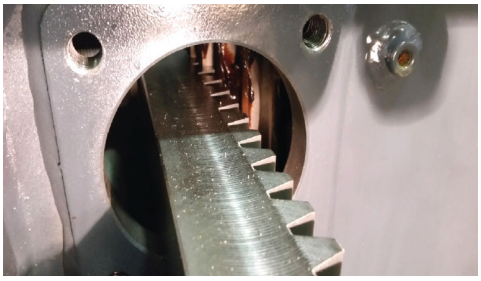

Radio Remote Control 2.0

The rotation system with rack and pinion is the best optimal solution for the most performative lifting capacity, it reduce the weights and crane dimension for the most compact configuration.

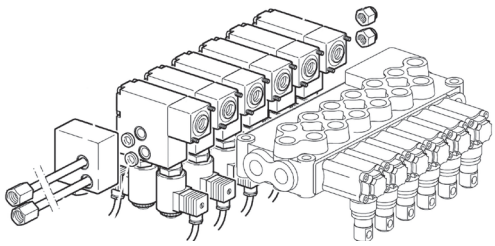

Radio Remote Control 3.0

Radio control with directly flanged actuation electronics with proportional distribution.
The remote control allows operating the crane while constantly monitoring the areas of operation.

Hydraulic Lifting Stabilizers 1.0

Radio control with directly flanged actuation electronics with proportional distribution. This system assists the operator with the possibility of using the radio control for stabilizing the crane and save operative time in increasing the security of the setup.

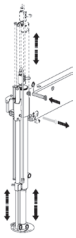

Electronic Radio Display

A display on the remote control allows the operator to maintain the total control of all the crane functions in real time by managing the work mode, the stability control, and oversee any maintenance and diagnostic messages.

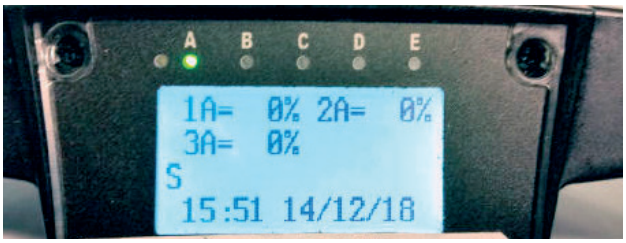

108 HIGH POWER

Load Charts

1 extensions

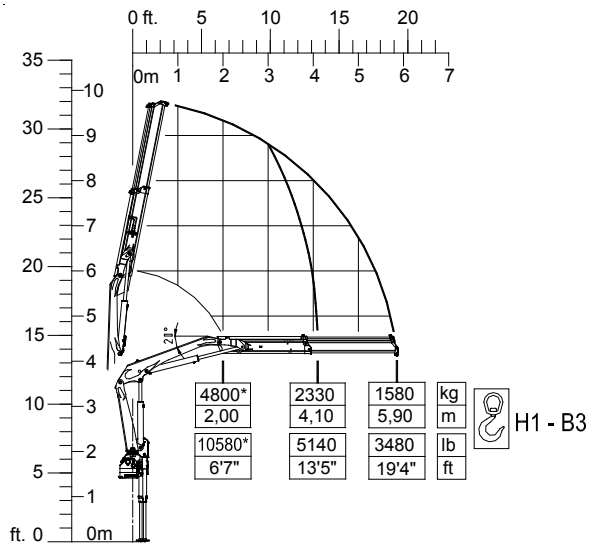

2 extensions

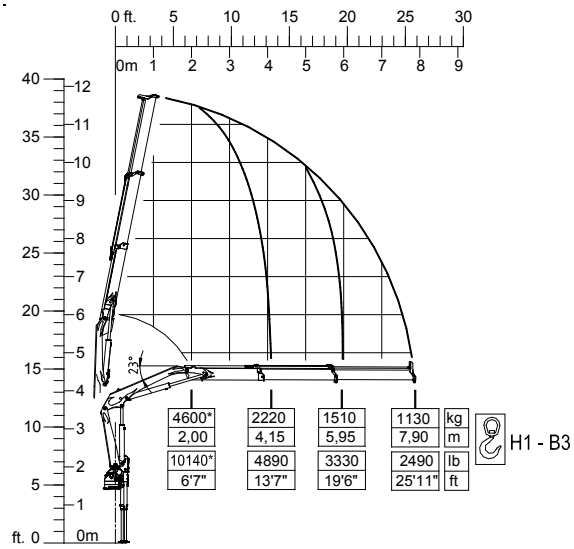

3 extensions

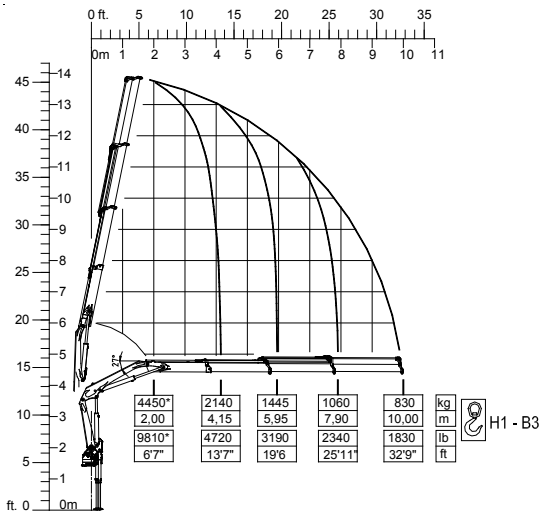

4 extensions

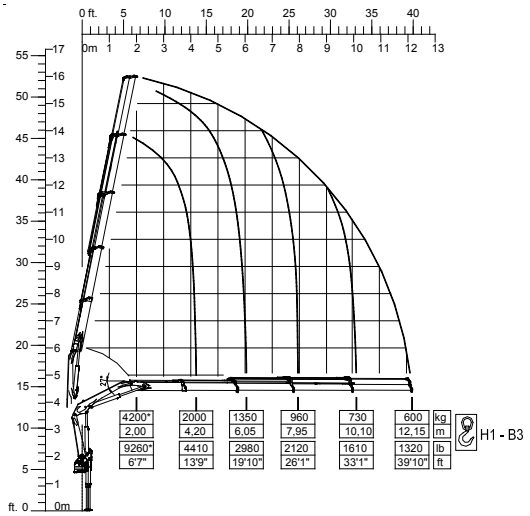

108.3 + J1

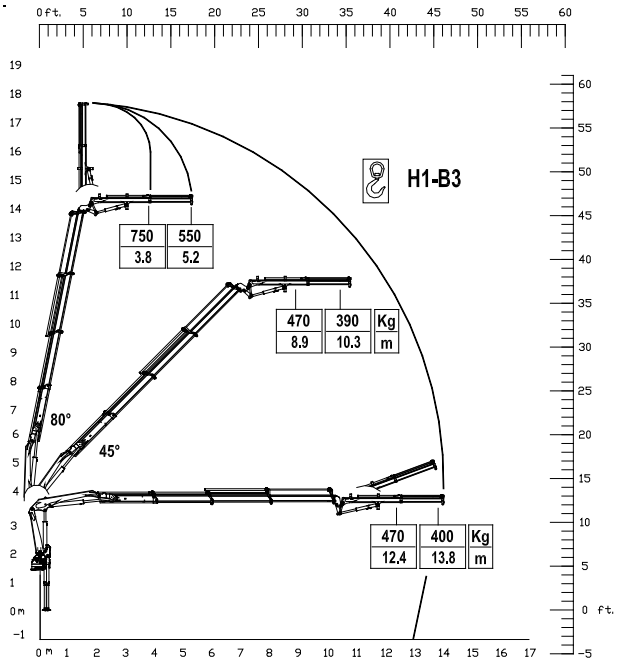

108.3 + J2

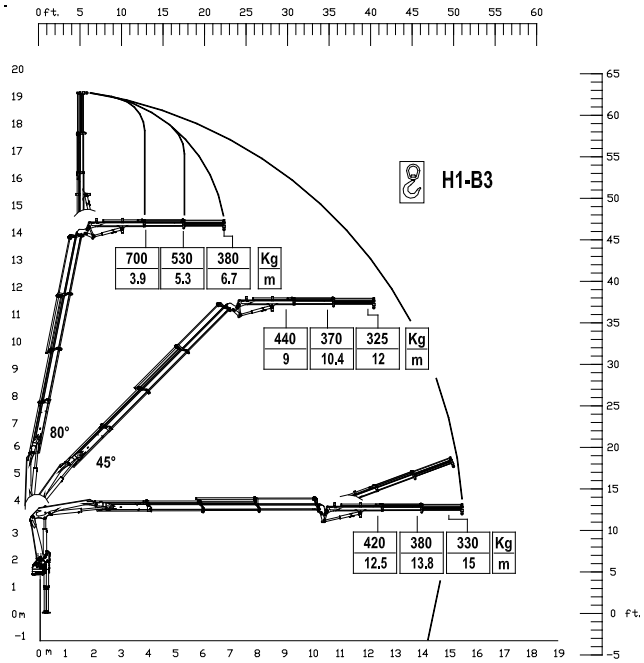

108 HIGH POWER

Crane Dimensions

back cabin left

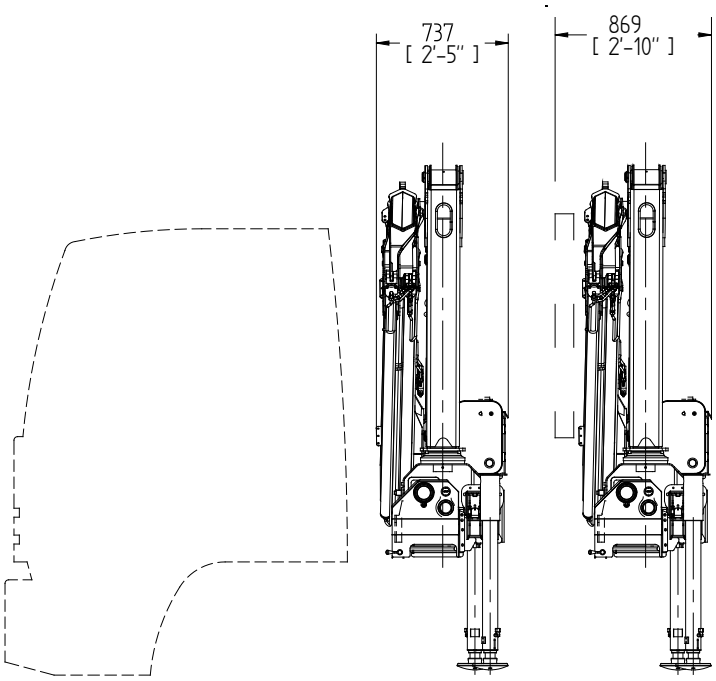

top cabin

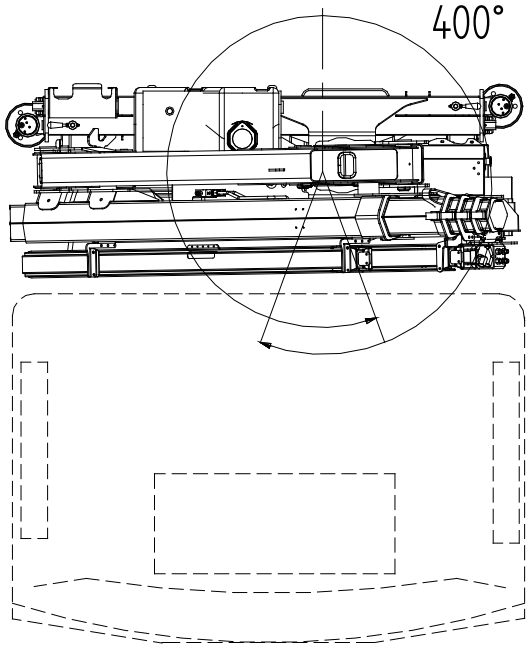

with TRACK CHAIN

rear truck

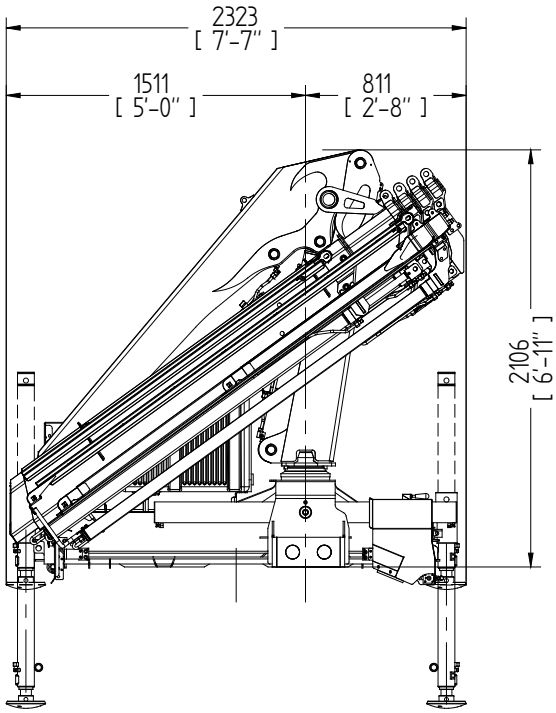

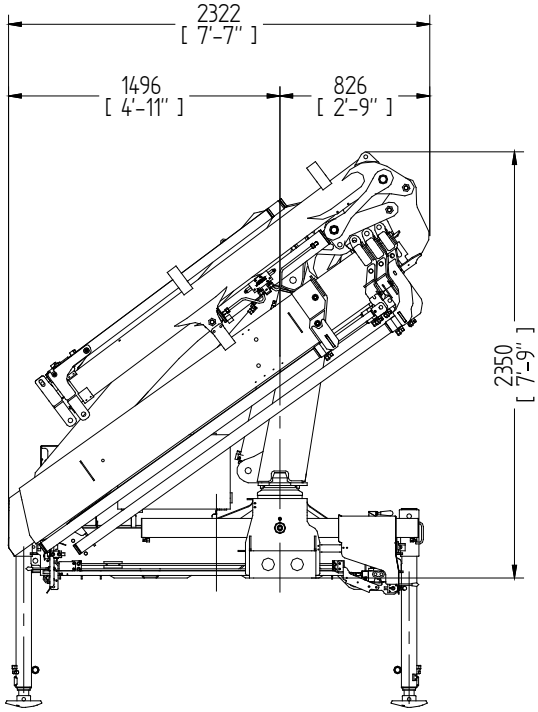

operational

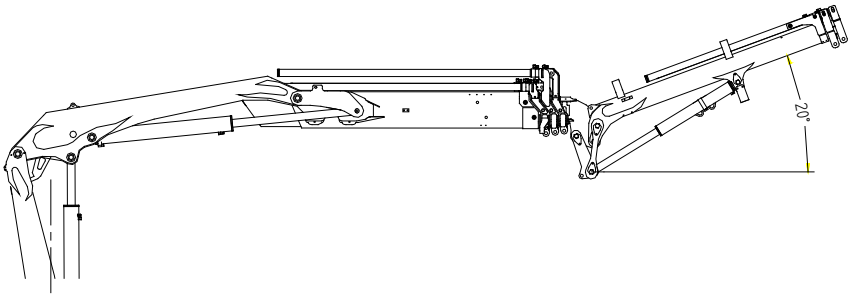

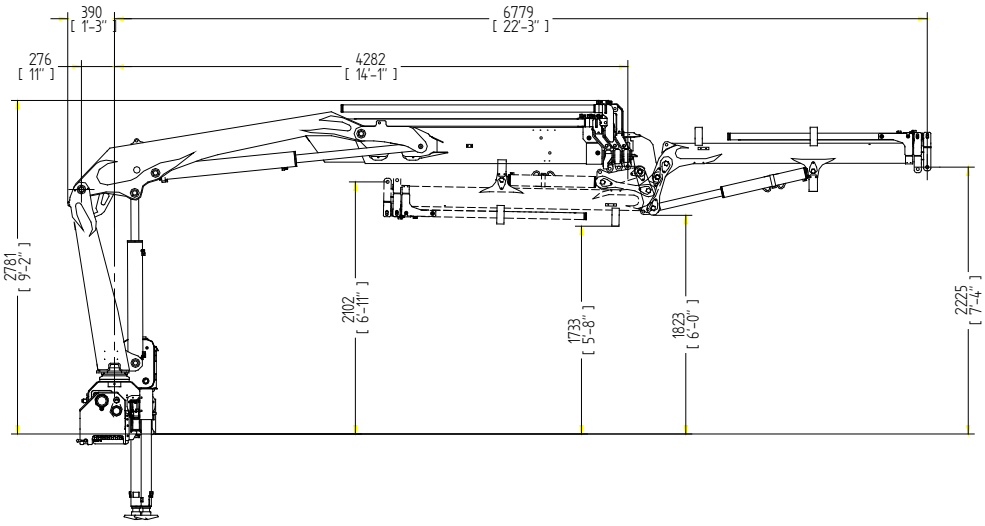

extended outriggers

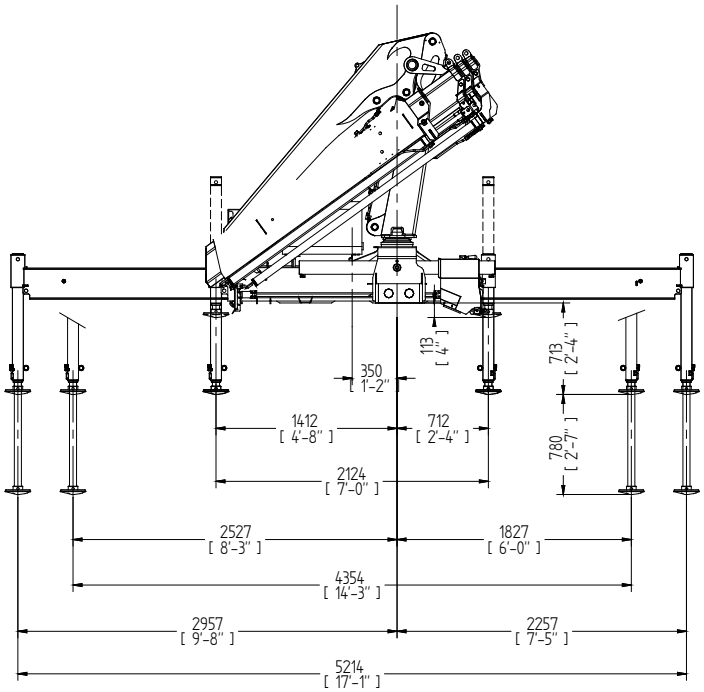

* Note:
Technical features are not binding.
The company reserves itself the right to any modification without notice

108 HIGH POWER

Technical Data

summarized data

	kN.m	bar	l/min	kg	°	mm	mm	mm	mm
108.1	93.7	280	25	1000	400	2323	737	2106	4350/5200
108.2	90.4	280	25	1100	400	2323	737	2106	4350/5200
108.3	87.1	280	25	1190	400	2323	737	2106	4350/5200
108.3J1	87.1	280	25	1310	400	2323	869	2350	4350/5200
108.3J2	87.1	280	25	1350	400	2323	869	2350	4350/5200
108.4	61.7	280	25	1260	400	2323	737	2106	4350/5200

	lbs.ft	psi	gal/min	lbs	°	ft/inc	ft/inc	ft/inc	ft/inc
108.1	69109	4060	6,6	2205	400	7'7"	2'1"	6'1"	14'9"/16'11"
108.2	66675	4350	6,6	2425	400	7'7"	2'1"	6'1"	14'9"/16'11"
108.3	64242	4350	6,6	2620	400	7'7"	2'1"	6'1"	14'9"/16'11"
108.3J1	64242	4350	6,6	2890	400	7'7"	2'10"	7'9"	14'9"/16'11"
108.3J2	64242	4350	6,6	2975	400	7'7"	2'10"	7'9"	14'9"/16'11"
108.4	32549	4350	6,6	2775	400	7'7"	2'1"	6'1"	14'9"/16'11"

technical data

Max. lifting moment	93.7 kNm	69109 ft.lbs
Max. hydraulic outreach	12.4 m	40'8"
Slewing angle	400°	400°
Slewing torque	1200 daNm	8680 ft.lbs
Stabilizer spread	4.35/5.20 mt	14'9"/16'11"
Fitting space required (min./max)	0.73/0.86 m	2'1"/2'9"
Width folded	2.3 m	7'7"
Max. operating pressure	280 bar	4350 psi
Recommended pump capacity	25 l/min	6.6 US gal./min
Dead weight (vers .1)	1000 kg	2205 lbs

* Note:
Technical features are not binding.
The company reserves itself the right to any modification without notice

GET READY TO A BETTER LIFTING EXPERIENCE

COPMA 108

knuckle boom cranes

Powerful Synergies

CPS GROUP S.P.A.
281 Via Emilia , Castel Bolognese (RA) , 48018
Italy

T +39 0546 653 711
sales.cpsgroup@cps-group.com
service.cpsgroup@cps-group.com

cps-group.com

UNICERT
ISO 9001:2008