cps-group.com

Powerful Synergies

COPMA

188

HIGH POWER

MODEL

COPMA 188

Performance & Power

188 HAS THE HIGHEST LIFTING RANGE AND TOP POWER-WEIGHT RATIO COMBINING ADVANCED TECHNOLOGY FEATURES FOR MORE PERFORMANCE.

- **HIGH POWER model, load category - 18 Ton/Mt**
- **Designed for every kind of job**
- **Strong linkage system on each arm to get maximum performance**
- **Precise and fast work execution**
- **High safety standards**

THE MOST POWERFUL CRANE FOR THE TOUGHEST MARKETS

COPMA 188

More Safety & Security

DESIGNED WITH THE HIGHEST HYDRAULIC SYSTEMS AND THE TOUGHEST STRUCTURAL STEEL TO PERFORM THE MAXIMUM LIFTING CAPACITY.

- **Performing and reliable electronic devices**
- **Column with high mechanical characteristics**
- **High Degree of User Friendliness**
- **Ready to work in a few movements**
- **Excellent weight/performance ratio**

THE BROAD

DESIGNED FOR FLEXIBLE SERVICES

COPMA 188

Technical Features

CUTTING EDGE FEATURES FOR MAXIMUM LIFTING POWER,STABILITY AND OPERATIONAL SAFETY IN EVERY WORKING CONDITION.

Standard features

- easy use: HSE easy use, HPVh easy use
- control: * TAD control, * CMS 2.0 control, * TES 3.0 control, * NCS control
- structure: CCLS structure, NBS structure, RRP structure

optional features

- easy use: HLS 2.0 easy use, MLS 2.0 easy use, ERD easy use
- control: WLC control, RRC 3.0 control, CRC 4.0 control

*E.C. market specific equipment

HSE easy use — High Speed Extension

Hydraulic system for reducing load losses and bottlenecks for the correct output sequence of the extensions by increasing the speed of 30%-60% thanks to the regenerative valve. Greater continuous performance thanks to lower fluid temperature.

HPVh easy use — High Power Velocity Hydraulic

Fully automatic hydraulic system for adjusting the crane lifting speed according to the maximum working pressure. With this system load capacity of the machine is optimized by reducing the dynamic structural effects.

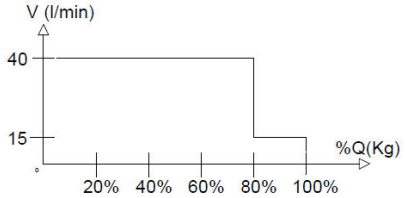

TAD control — Transport Alert Device

Sensors on the basement follow the correct closing of the beams and a column switch sensor indicates if the crane is in a folded position, no more than 4 mt in height. The operator is warned with light and sound signals in the truck cabin.

CMS 1.0 control — Crane Monitoring System 2.0

Crane stability control system TES2-TES3 with safety and overload controls and HPVE lifting speed management.
Active control on 4-8 working areas according to the model and vehicle stability requirements.

TES 3.0 control — Truck Electronic Stability 3.0

Active stability control for performance optimization according to the type of stabilization (3) to guarantee maximum safety in all working conditions. Mandatory in the CE market, it helps a better vehicle-crane configuration.

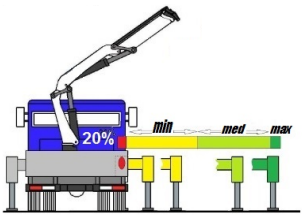

NCS control — Negative Control System

Slope sensors mounted on the articulated booms of the crane, combined with the electronic control, control the maximum vertical angle of the arms and the JIB preventing incorrect or dangerous movements by the operator.

CCLS structure — Constant Control Link

The cranes equipped with connecting rods on the articulations, with a constant lifting moment over the entire working arc, allow to 100% optimize the crane's capacity in positions close to the maximum vertical.

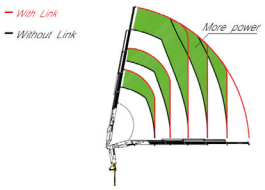

NBS structure — Negative Boom System

The linkage on the articulation of the secondary boom permits the introduction of loads within restricted spaces. It enables the recovery of the deflection of the extension boom group due to the weight and the load raised on the extensions.

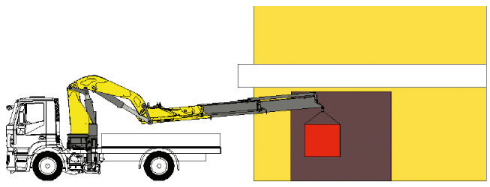

Rotation Rack Pinion

The rotation system with rack and pinion is the best optimal solution for the most performative lifting capacity, it reduce the weights and crane dimension for the most compact configuration.

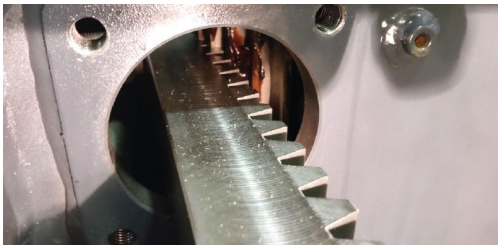

Hydraulic Lifting Stabilizers 2.0

The cylinder of the stabilizer is lifted with an auxiliary jack, allowing the vertical movement within the bushes or rotating around a pin. It saves operative time in increasing the security of the setup.

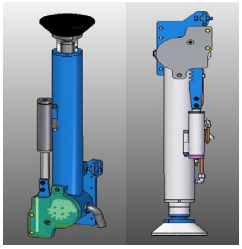

Manual Lifting Stabilizers 2.0

Manual raising of the stabilizers facilitated by a compressed gas cylinder which assists the operator during the rotation of the jack. This system assists the operator with less effort in adjusting the legs.

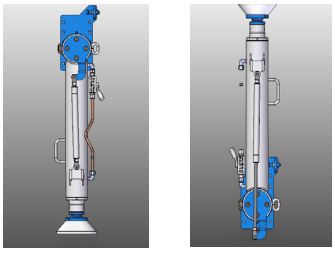

Electronic Radio Display

A display on the remote control allows the operator to maintain the total control of all the crane functions in real time by managing the work mode, the stability control, and oversee any maintenance and diagnostic messages.

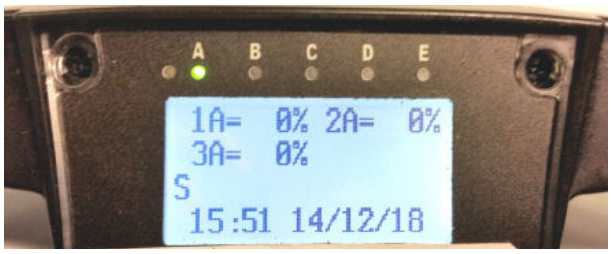

Radio Remote Control 3.0

Radio control with directly flanged actuation electronics with proportional distribution.
The remote control allows operating the crane while constantly monitoring the areas of operation.

Winch Linear Control

The winch linear electronic control allows pulling the rope according to the working angle of the crane and the JIB .
It optimize the load control and makes every movement easier and safer.

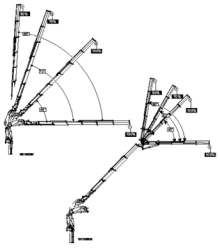

COPMA® Remote Connectivity 4.0

COPMA® Remote Connectivity 4.0 to the crane.
Two-way communication by GPRS for real-time diagnosis and remote real-time parameter setting and/or adjustment.

188 HIGH POWER

Load Charts

2

2 extensions

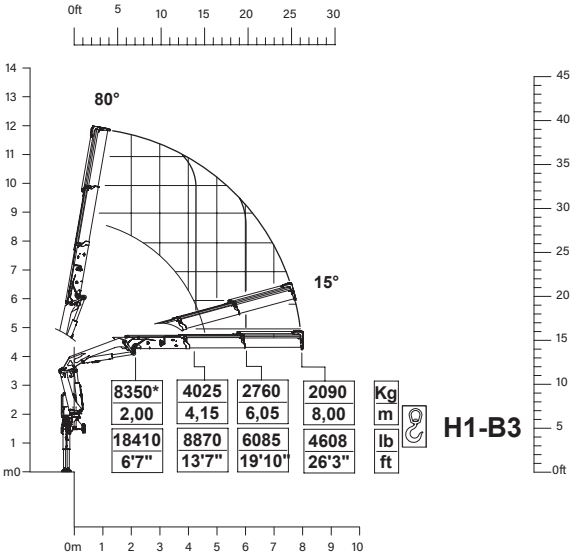

3 extensions

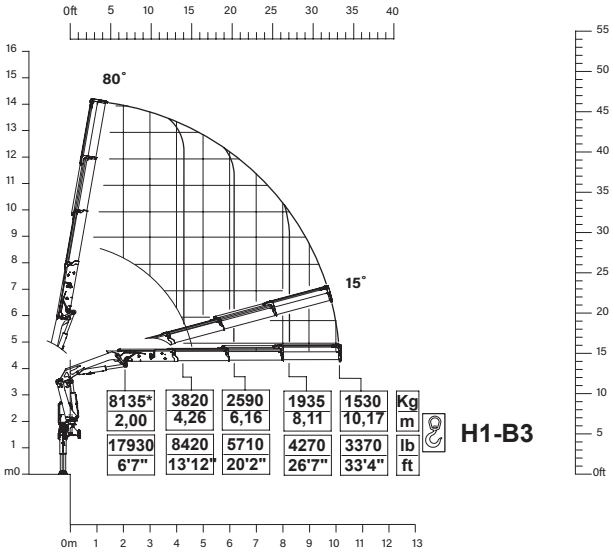

4 extensions

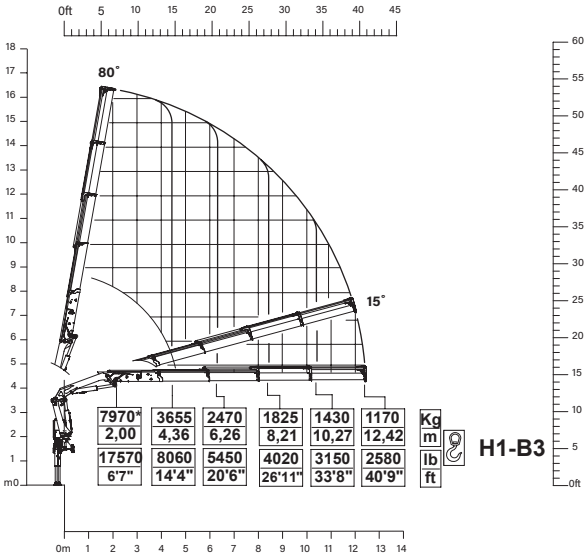

5 extensions

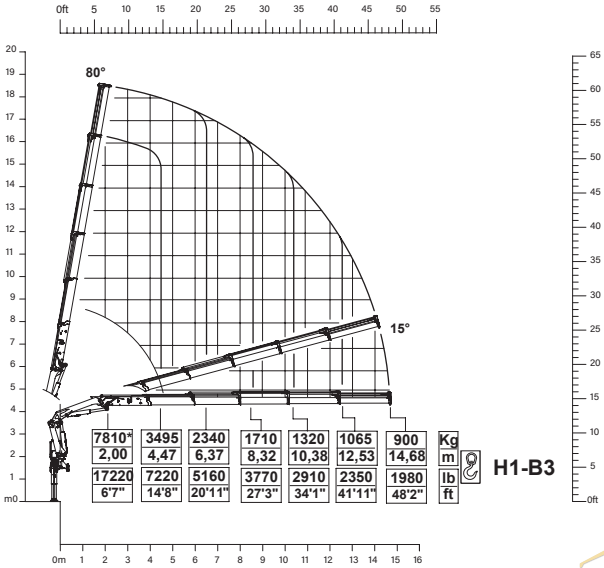

6 extensions

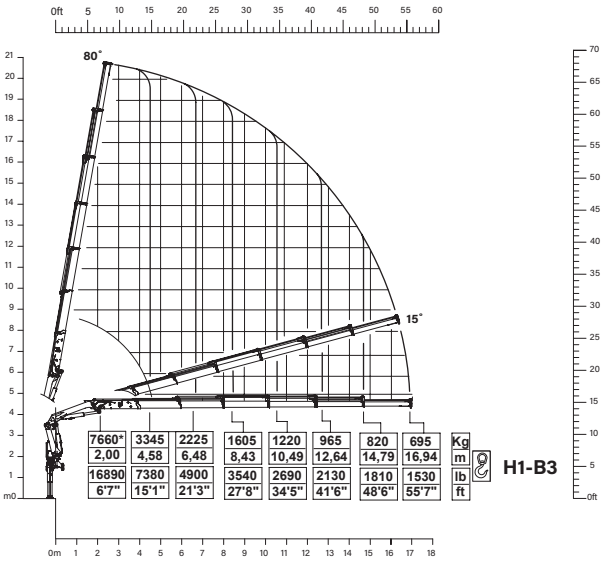

7 extensions

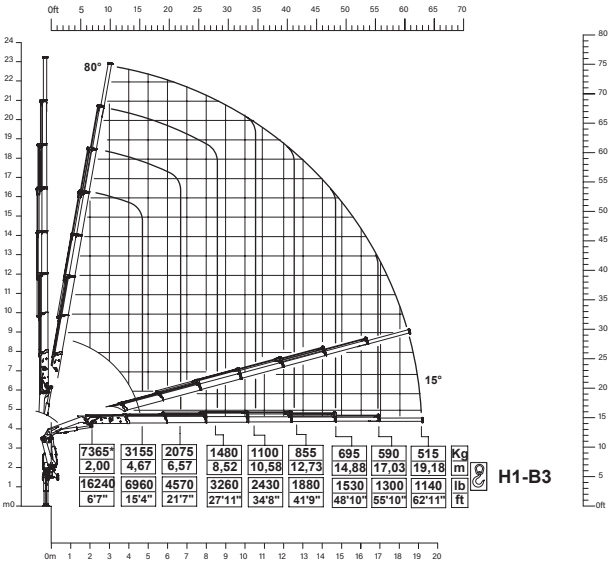

188.4 + J2

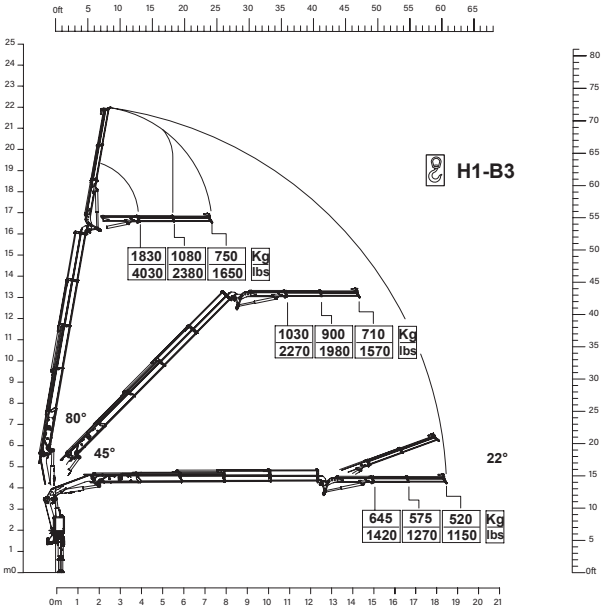

188.4 + J3

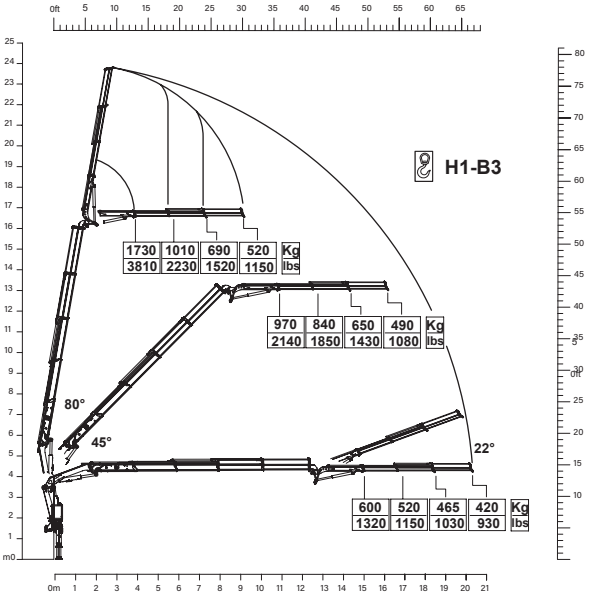

188.4 + J4

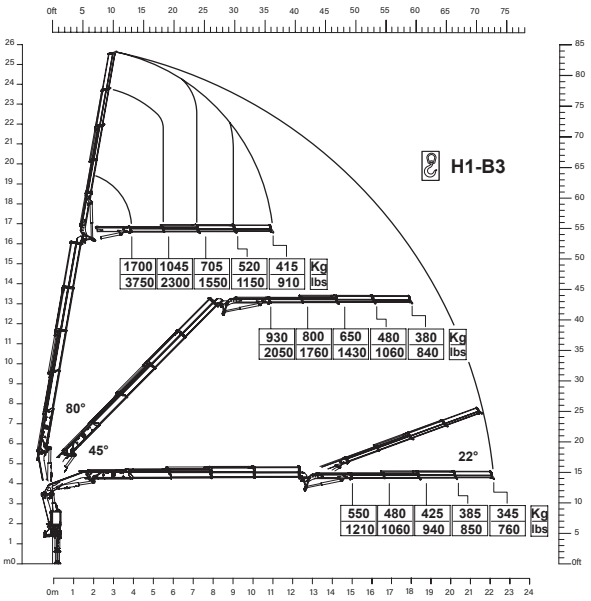

188.5 + J2

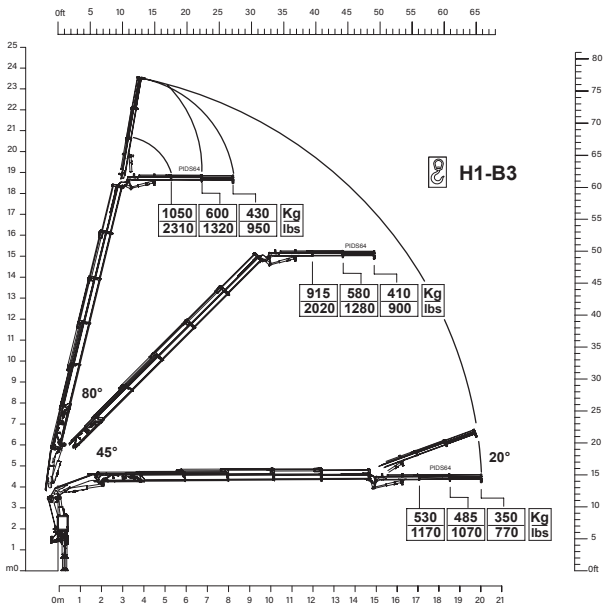

188 HIGH POWER

Crane Dimensions

back cabin left

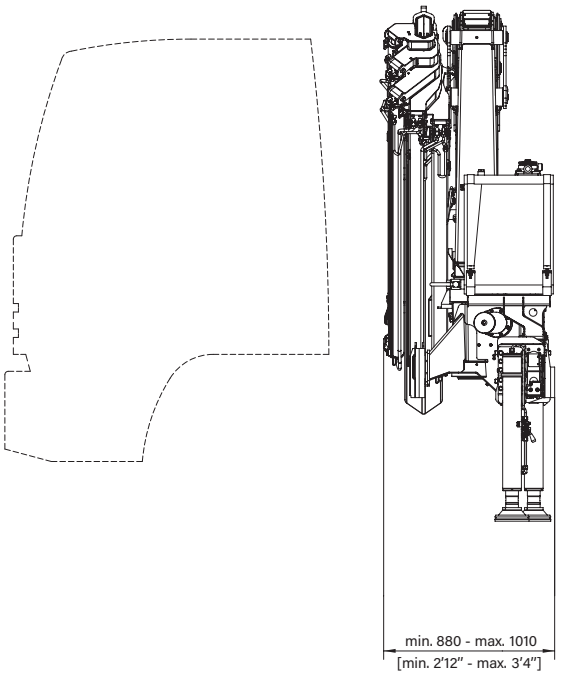

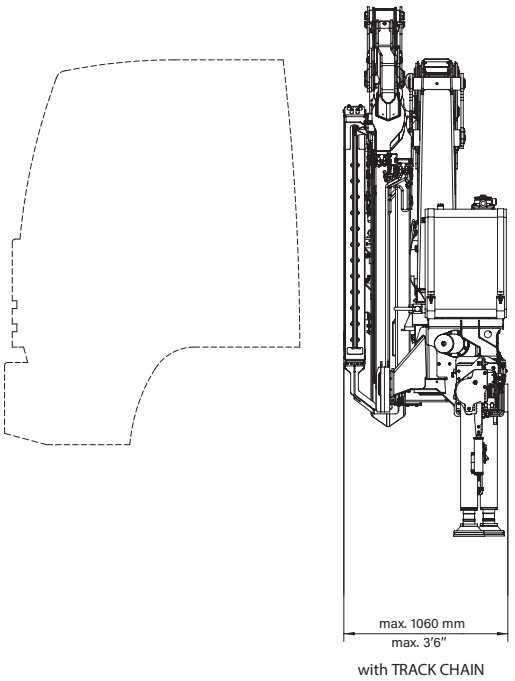

rear truck

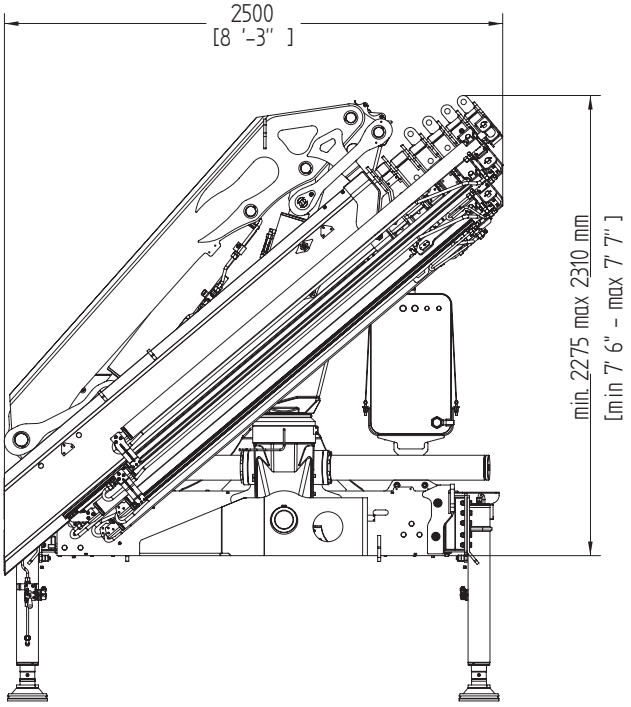

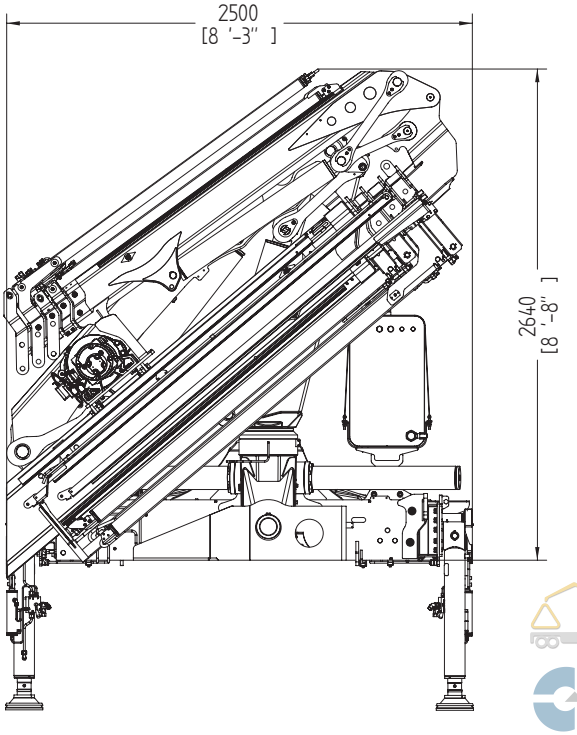

top cabin

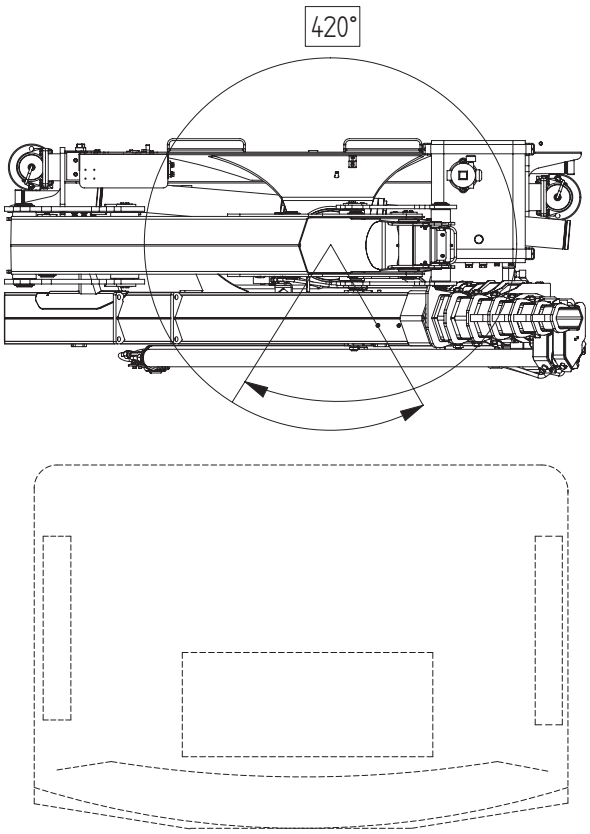

operational

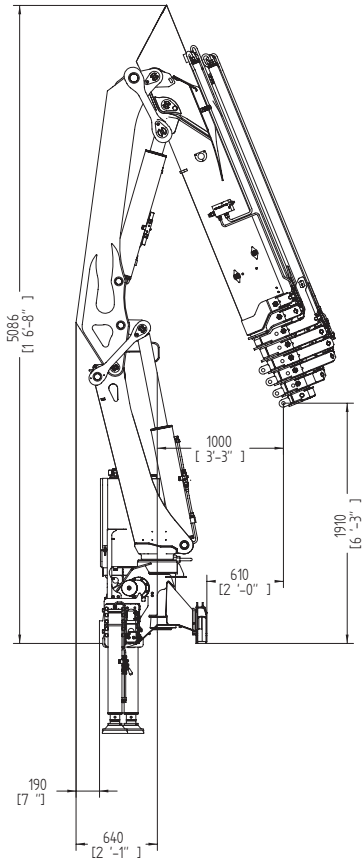

extended outriggers

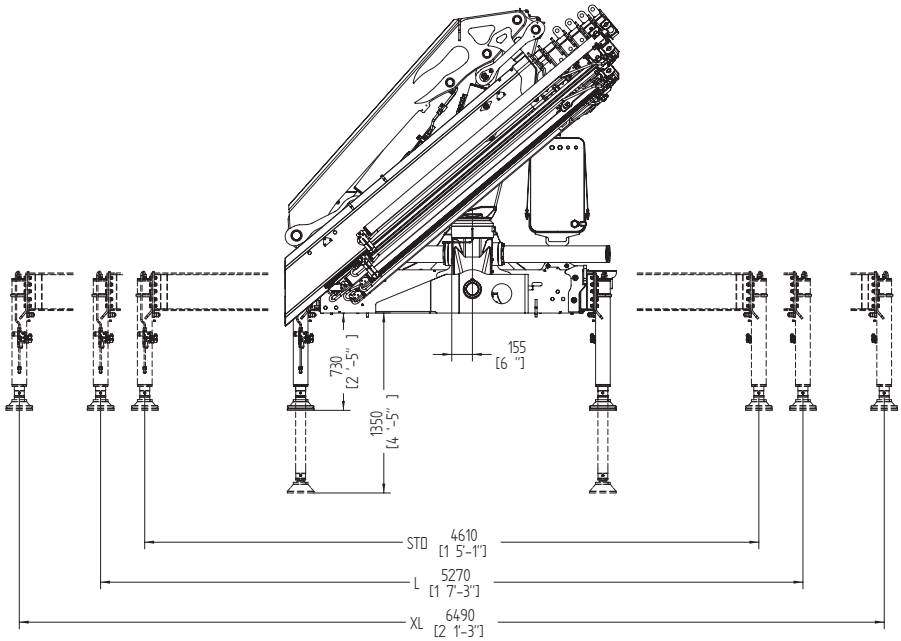

* Note:
Technical features are not binding.
The company reserves itself the right to any modification without notice

188 HIGH POWER

Technical Data

summarized data

	kN.m	bar	l/min	kg	°	mm	mm	mm	mm
188.2	163,9	325	60	1935	420	2500	880	2275	4600/5270/6500
188.3	159.5	325	60	2055	420	2500	880	2275	4600/5270/6500
188.4	156.6	325	60	2170	420	2500	915	2275	4600/5270/6500
188.4J2	156.6	325	60	2530	420	2500	1060	2640	4600/5270/6500
188.4J3	156.6	325	60	2595	420	2500	1060	2640	4600/5270/6500
188.4J4	156.6	325	60	2635	420	2500	1060	2640	4600/5270/6500
188.5	153.3	325	60	2280	420	2500	980	2275	4600/5270/6500
188.5J2	153.3	325	60	2535	420	2500	1060	2550	4600/5270/6500
188.6	150.9	325	60	2380	420	2500	1010	2275	4600/5270/6500
188.7	144.5	325	60	2470	420	2500	1010	2310	4600/5270/6500

	lbs.ft	psi	gal/min	lbs	°	ft/inc	ft/inc	ft/inc	ft/inc
188.2	120845	4713	15,85	3968	420	8'2"	2'12"	7'6"	15'1"-17'3"-21'3"
188.3	117600	4713	15,85	4530	420	8'2"	2'12"	7'6"	15'1"-17'3"-21'3"
188.4	115462	4713	15,85	4784	420	8'2"	3'	7'6"	15'1"-17'3"-21'3"
184.4J2	115462	4713	15,85	5580	420	8'2"	3'6"	8'8"	15'1"-17'3"-21'3"
184.4J3	115462	4713	15,85	5720	420	8'2"	3'6"	8'8"	15'1"-17'3"-21'3"
184.4J4	115462	4713	15,85	5810	420	8'2"	3'6"	8'8"	15'1"-17'3"-21'3"
188.5	113030	4713	15,85	5030	420	8'2"	3'3"	7'6"	15'1"-17'3"-21'3"
188.5J2	113030	4713	15,85	5590	420	8'2"	3'6"	8'4"	15'1"-17'3"-21'3"
188.6	111260	4713	15,85	5250	420	8'2"	3'4"	7'6"	15'1"-17'3"-21'3"
188.7	106541	4713	15,85	5445	420	8'2"	3'4"	7'7"	15'1"-17'3"-21'3"

technical data

Max. lifting moment	163.9 kNm	120845 ft.lbs
Max. hydraulic outreach	19.32 m	63'39"
Slewing angle	420°	420°
Slewing torque	2200 daNm	16220.8 ft.lbs
Stabilizer spread	4.60/5.27/6.5 mt	15'1"/ 17'3" 21'3"
Fitting space required (min./max)	0.88 m/1.01 m	2'12"/3'4"
Width folded	2,50 m	8'2"
Max. operating pressure	325 bar	4641 psi
Recommended pump capacity	60 l/min	15.85 US gal./min
Dead weight (vers .2)	1935 kg	4266 lbs

* Note:
Technical features are not binding.
The company reserves itself the right to any modification without notice

GET READY TO A BETTER LIFTING EXPERIENCE

COPMA 188

knuckle boom cranes

Powerful Synergies

CPS GROUP S.P.A.
281 Via Emilia , Castel Bolognese (RA) , 48014
Italy

T +39 0546 653 711
sales.cpsgroup@cps-group.com
service.cpsgroup@cps-group.com

cps-group.com

UNICERT
ISO 9001:2008