cps-group.com

Powerful Synergies

COPMA® 218

ESSENTIAL
MODEL

COPMA 218

Performance & Power

218 IS INNOVATIVE ENGINEERING FOR TOP PRECISION, EFFICIENCY, SPEED AND PERFORMANCE. AN ESSENTIAL MASTERPIECE OF LIFTING TECHNOLOGY.

- **ESSENTIAL model, load category - 21 Ton/Mt**
- **Essential in design, powerful in performance**
- **Robust arm system**
- **Simple and reliable**
- **Excellent operational safety**

THE MOST POWERFUL CRANE FOR THE TOUGHEST MARKETS

COPMA 218

More Safety & Security

DESIGNED WITH THE HIGHEST HYDRAULIC SYSTEMS AND THE TOUGHEST STRUCTURAL STEEL TO PERFORM THE MAXIMUM LIFTING CAPACITY.

- **Optimized and reliable hydraulic technology**
- **Column with high mechanical characteristics**
- **High Degree of User Friendliness**
- **Efficiency and Reliability thanks to essential design**
- **Excellent weight/performance ratio**

 2021 All rights reserved CPS GROUP S.P.A.

DESIGNED FOR FLEXIBLE SERVICES

 2021 All rights reserved CPS GROUP

COPMA 218

Technical Features

CUTTING EDGE FEATURES FOR MAXIMUM LIFTING POWER,STABILITY AND OPERATIONAL SAFETY IN EVERY WORKING CONDITION.

Standard features

- control: * TAD control, * CMS 1.0 control, * TES 2.0 control
- structure: CCLS structure, NBS structure, RRP structure

optional features

- easy use: HLS 2.0 easy use, MLS 2.0 easy use, ERD easy use, HSE easy use
- control: WLC control, RRC 3.0 control, * CMS 2.0 control, CRC 4.0 control

*E.C. market specific equipment

CPS STEEL CPS COPMA® PESCI PESCI MARINE 2021 All rights reserved CPS GROUP

CMS 1.0 control — Crane Monitoring System 1.0

Crane stability control system TES1-TES2, safety control and overload control for medium-small cranes. Controlling the crane in 4 work areas, each area can have custom lifting settings depending on the vehicle stability.

RRC 3.0 control — Radio Remote Control 3.0

Radio control with directly flanged actuation electronics with proportional distribution.
The remote control allows operating the crane while constantly monitoring the areas of operation.

CCLS structure — Constant Control Link

The cranes equipped with connecting rods on the articulations, with a constant lifting moment over the entire working arc, allow to 100% optimize the crane's capacity in positions close to the maximum vertical.

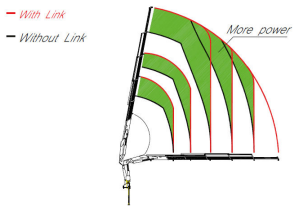

TAD control — Transport Alert Device

Sensors on the basement control the correct closing of the beams and a column switch sensor indicates if the crane is in a folded position, no more than 4 mt in height. The operator is warned with light and sound signals in the truck cabin.

RRP structure — Rotation Rack Pinion

The rotation system with rack and pinion is the best optimal solution for the most performative lifting capacity, it reduce the weights and crane dimension for the most compact configuration.

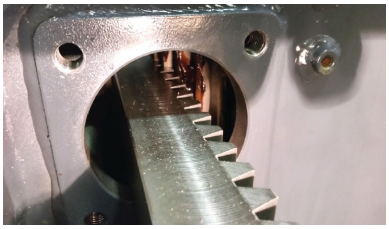

TES 2.0 control — Truck Electronic Stability 2.0

Active stability control for performance optimization according to the type of stabilization (2) to guarantee maximum safety in all working conditions. Mandatory in the CE market, it helps a better vehicle-crane configuration.

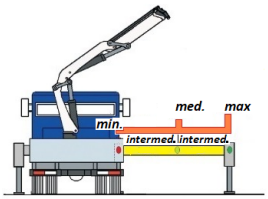

ERD easy use — Electronic Radio Display

A display on the remote control allows the operator to maintain the total control of all the crane functions in real time by managing the work mode, the stability control, and oversee any maintenance and diagnostic messages.

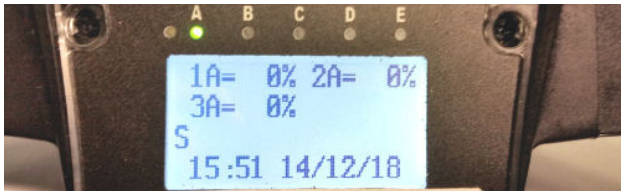

NBS structure — Negative Boom System

The linkage on the articulation of the secondary boom permits the introduction of loads within restricted spaces. It enables the recovery of the deflection of the extension boom group due to the weight and the load raised on the extensions.

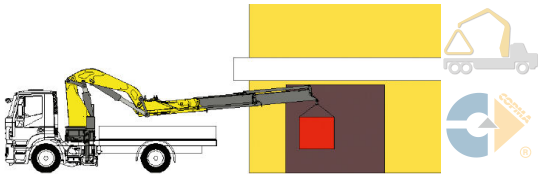

2021 All rights reserved CPS GROUP

Hydraulic Lifting Stabilizers 2.0

The cylinder of the stabilizer is lifted with an auxiliary jack, allowing the vertical movement within the bushes or rotating around a pin. It saves operative time in increasing the security of the setup.

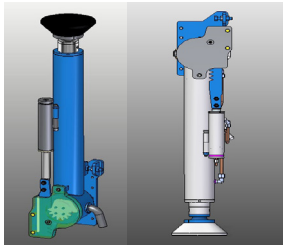

Manual Lifting Stabilizers 2.0

Manual raising of the stabilizers facilitated by a compressed gas cylinder which assists the operator during the rotation of the jack. This system assists the operator with less effort in adjusting the legs.

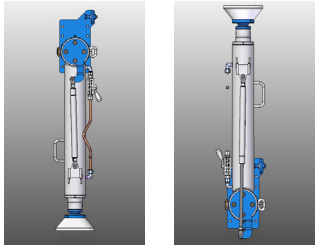

Winch Linear Control

The winch linear electronic control allows pulling the rope according to the working angle of the crane and the JIB .
It optimize the load control and makes every movement easier and safer.

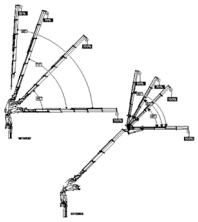

High Speed Extension

Hydraulic system for reducing load losses and bottlenecks for the correct output sequence of the extensions by increasing the speed of 30%-60% thanks to the regenerative valve. Greater continuous performance thanks to lower fluid temperature.

Crane Monitoring System 2.0

Crane stability control system TES2-TES3 with safety and overload controls and HPVE lifting speed management.
Active control on 4-8 working areas according to the model and vehicle stability requirements.

COPMA ® Remote Connectivity 4.0

COPMA® Remote Connectivity 4.0 to the crane.
Two-way communication by GPRS for real-time diagnosis and remote real-time parameter setting and/or adjustment.

2021 All rights reserved CPS GROUP

218 ESSENTIAL

Load Charts

2 extensions

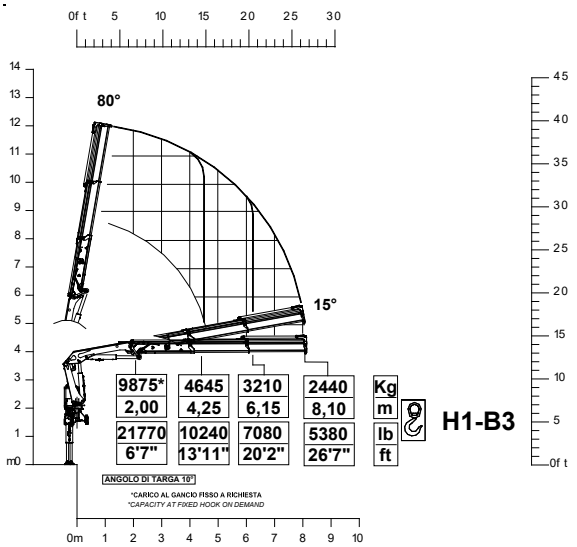

3 extensions

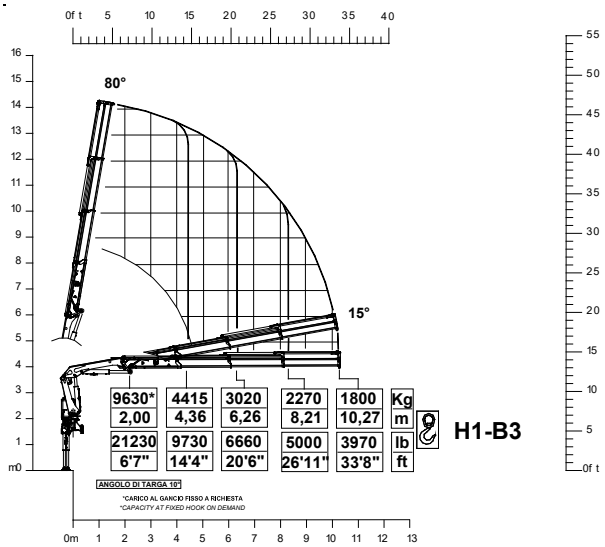

4 extensions

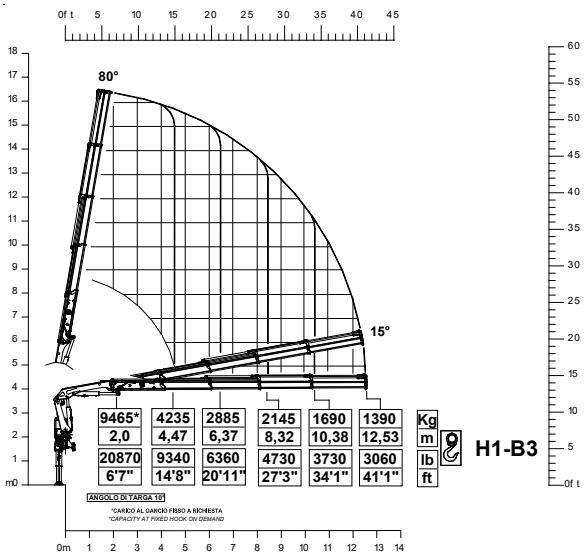

5 extensions

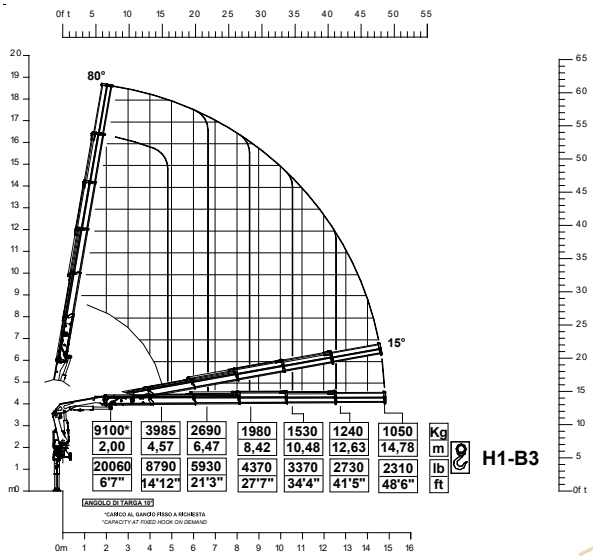

 2021 All rights reserved CPS GROUP

6 extensions

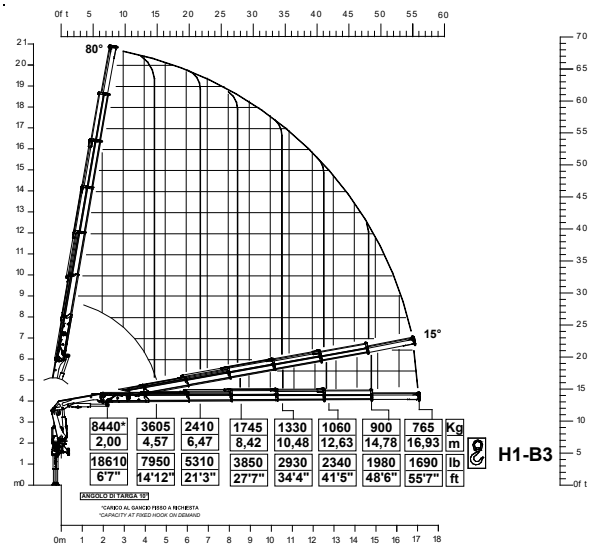

8440*	3605	2410	1745	1330	1060	900	765	Kg
2,00	4,57	6,47	8,42	10,48	12,63	14,78	16,93	m
18610	7950	5310	3850	2930	2340	1980	1690	lb
6'7"	14'12"	21'3"	27'7"	34'4"	41'5"	48'6"	55'7"	ft

CPS STEEL CPS COPMA ® PESCI PESCI MARINE 2021 All rights reserved CPS GROUP

218 ESSENTIAL

Crane Dimensions

back cabin left

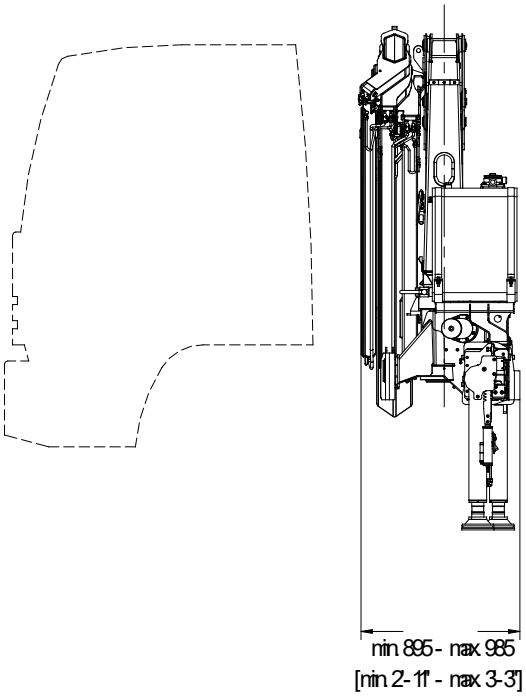

rear truck

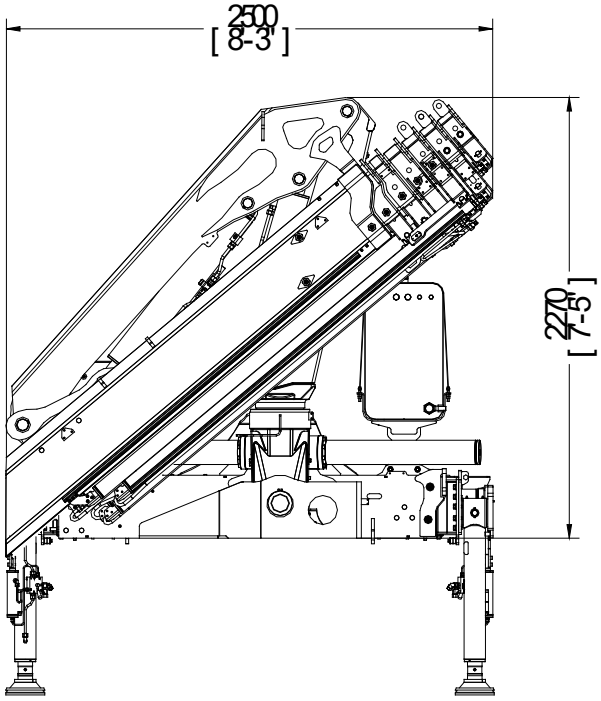

top cabin

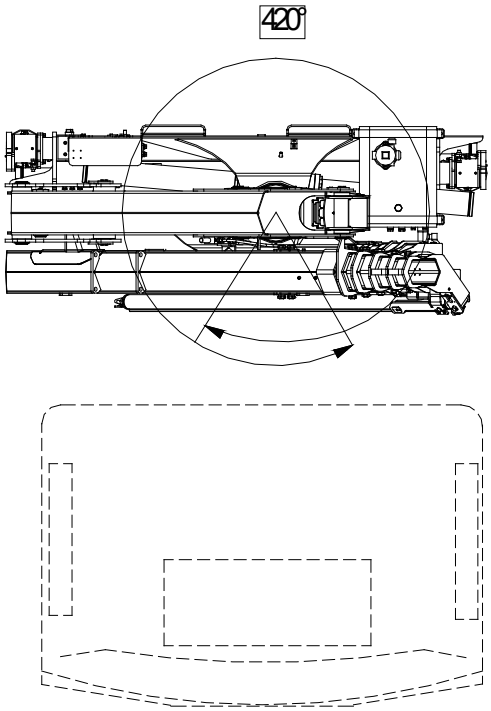

operational

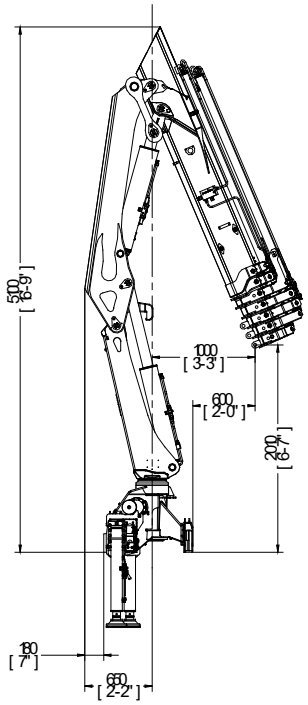

 2021 All rights reserved CPS GROUP

operational

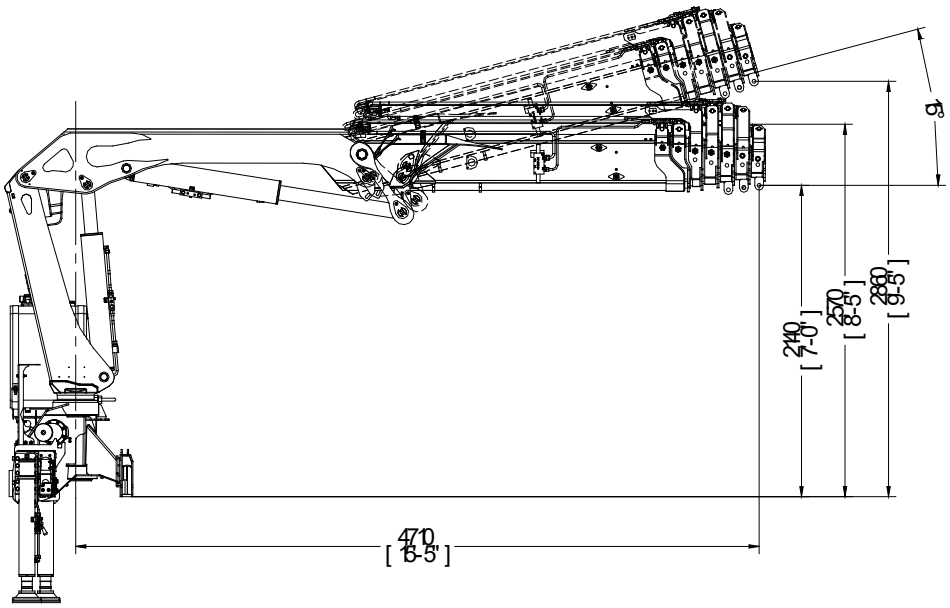

extended outriggers

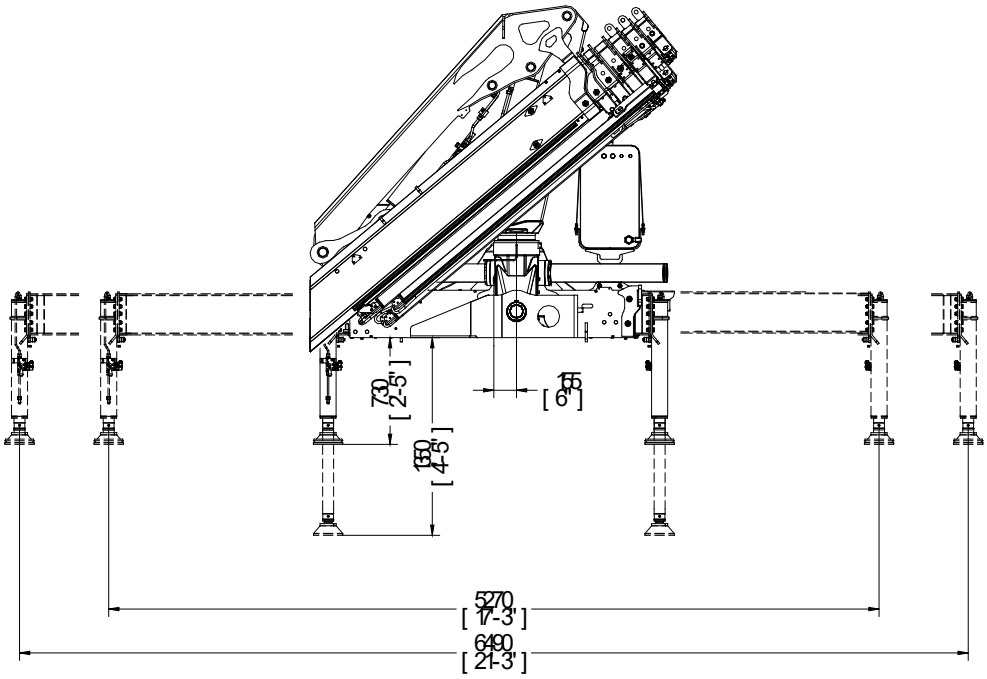

* Note:
Technical features are not binding.
The company reserves itself the right to any modification without notice

2021 All rights reserved CPS GROUP

218 ESSENTIAL

Technical

summarized data

	kN.m	bar	l/min	kg	°	mm	mm	mm	mm
218.2	193.9	320	50	2160	420	2500	895	2270	5270/6500
218.3	188.9	320	50	2290	420	2500	895	2270	5270/6500
218.4	185.6	320	50	2420	420	2500	925	2270	5270/6500
218.5	178.6	320	50	2540	420	2500	985	2270	5270/6500
218.6	165.6	320	50	2640	420	2500	985	2270	5270/6500

	lbs.ft	psi	gal/min	lbs	°	ft/inc	ft/inc	ft/inc	ft/inc
218.2	142964	4641	13,21	4761	420	8'2"	2'11"	7'5"	17'3"-21'3"
218.3	139277	4641	13,21	5048	420	8'2"	2'11"	7'5"	17'3"-21'3"
218.4	136844	4641	13,21	5335	420	8'2"	3'	7'5"	17'3"-21'3"
218.5	131683	4641	13,21	5599	420	8'2"	3'3"	7'5"	17'3"-21'3"
218.6	122140	4641	13,21	5820	420	8'2"	3'3"	7'5"	17'3"-21'3"

technical data

Max. lifting moment	193 kNm	142964 ft.lbs
Max. hydraulic outreach	17.03 m	56'04"
Slewing angle	420°	420°
Slewing torque	2840 daNm	20939 ft.lbs
Stabilizer spread	5.27/6.5 mt	17'3"/21'3"
Fitting space required (min./max)	0.89 m/0.98 m	2'10"/3'2"
Width folded	2,50 m	8'2"
Max. operating pressure	320 bar	4641 psi
Recommended pump capacity	50 l/min	13.21 US gal./min
Dead weight (vers .2)	2160 kg	4761 lbs

* Note:
Technical features are not binding.
The company reserves itself the right to any modification without notice

 2021 All rights reserved CPS GROUP

CPS STEEL CPS COPMA ® PESCI PESCI MARINE 2021 All rights reserved CPS GROUP

GET READY TO A BETTER LIFTING EXPERIENCE

 2021 All rights reserved CPS GROUP

COPMA 218

knuckle boom cranes

Powerful Synergies

CPS GROUP S.P.A.
281 Via Emilia , Castel Bolognese (RA) , 48018
Italy

T +39 0546 653 711
sales.cpsgroup@cps-group.com
service.cpsgroup@cps-group.com

cps-group.com

UNICERT
ISO 9001:2008

COPMA MODEL 218 ESSENTIAL 3-2021 all rights reserved CPS GROUP

Technical features, design and specifications are not binding, CPS GROUP S.P.A. reserves itself the right to any modifications without prior notice.
COPMA , PESCI, PESCI MARINE and CPS are registered trademarks of CPS GROUP S.P.A. in Italy and other countries.