cps-group.com

Powerful Synergies

COPMA®
950

TOP RANGE
MODEL

COPMA 950

Performance & Power

950 HAS COMPACT DIMENSIONS AND OPTIMIZED WEIGHTS WITH A CUSTOMIZED DESIGN FOR MORE POWER AND RELIABILITY AT EVERY OPERATOR NEED.

- **TOP RANGE - HEAVY RANGE model, over 90 Ton/Mt**
- **High tensile strength steel**
- **Efficient safety system**
- **Reliability, speed and precision**
- **Extra long working life cycle**
- **Easier maintenance operations**

THE MOST POWERFUL CRANE FOR THE TOUGHEST MARKETS

COPMA 950

More Safety & Security

DESIGNED WITH THE HIGHEST HYDRAULIC SYSTEMS AND THE TOUGHEST STRUCTURAL STEEL TO PERFORM THE MAXIMUM LIFTING CAPACITY.

- **Superior Hydraulic Technology**
- **Dynamic Electronic Controls**
- **High Degree of User Friendliness**
- **Efficiency and Reliability thanks to superior structural features**
- **More Efficiency with advanced electronic controls**

DESIGNED FOR FLEXIBLE SERVICES

COPMA 950
Technical Features

CUTTING EDGE FEATURES FOR MAXIMUM LIFTING POWER,STABILITY AND OPERATIONAL SAFETY IN EVERY WORKING CONDITION.

Standard features

- easy use
  - HSE easy use
  - ERD easy use
  - HPVe easy use
  - HLS 2.0 easy use
- control
  - * TAD control
  - RRC 3.0 control
  - * CMS 2.0 control
  - * TES 3.0 control
  - * NCS control
- structure
  - CCLS structure
  - NBS structure
  - RES 2.0 structure
  - HTSS structure

optional features

- control
  - WLC control
  - * PJM control
  - * CMS 3.0 control
  - CRC 4.0 control

* CE version

HSE easy use — High Speed Extension

Hydraulic system for reducing load losses and bottlenecks for the correct output sequence of the extensions by increasing the speed of 30%-60% thanks to the regenerative valve. Greater continuous performance thanks to lower fluid temperature.

HPVe easy use — High Power Velocity Electronic

A valve electronically manages the flow of oil to the distributor by increasing the load capacity of the crane and intervening on the lifting speed. Allowing the reduction of dynamic effects while optimizing performance.

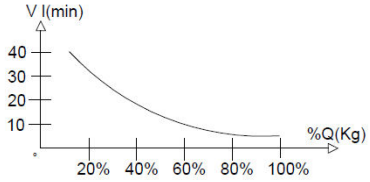

TAD control — Transport Alert Device

Sensors on the basement guarantee the correct closing of the beams and a column switch sensor indicates if the crane is in a folded position, no more than 4 Mt in height. The operator is warned with light and sound signals in the truck cabin.

CMS 2.0 control — Crane Monitoring System 2.0

Crane stability control system TES2-TES3 with safety and overload controls and HPVE lifting speed management. Active control on 4-8 working areas according to the model and vehicle stability requirements.

CCLS structure — Constant Control Link

The cranes equipped with connecting rods on the articulations, with a constant lifting moment over the entire working arc, allow to 100% optimize the crane's capacity in positions close to the maximum vertical.

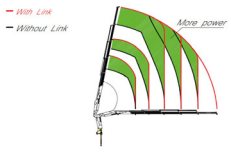

ERD easy use — Electronic Radio Display

A display on the remote control allows the operator to maintain the total control of all the crane functions in real time by managing the work mode, the stability control, and oversee any maintenance and diagnostic messages.

HLS 2.0 easy use — Hydraulic Lifting Stabilizers 2.0

The stabilizer cylinder is lifted thanks to an auxiliary jack, allowing the vertical movement inside a bush or a rotation around a pin. This easy use system saves time and allows an efficient stabilizer set up.

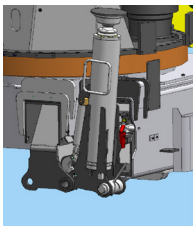

RRC 3.0 control — Radio Remote Control 3.0

Radio control with directly flanged actuation electronics with proportional distribution.
The remote control allows operating the crane while constantly monitoring the areas of operation.

TES 3.0 control — Truck Electronic Stability 3.0

Active stability control for performance optimization according to the type of stabilization to guarantee maximum safety in all working conditions. Mandatory in the CE market, it helps a better vehicle-crane configuration.

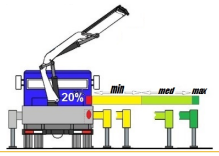

NCS control — Negative Control System

Slope sensors mounted on the articulated booms of the crane, combined with the electronic control, manage the maximum vertical angle of the arms and the JIB preventing incorrect or dangerous movements by the operator.

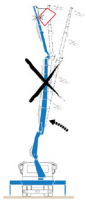

NBS structure — Negative Boom System

The linkage on the articulation of the secondary boom permits the introduction of loads within restricted spaces. It enables the recovery of the deflection of the extension boom group due to the weight and the load raised on the extensions.

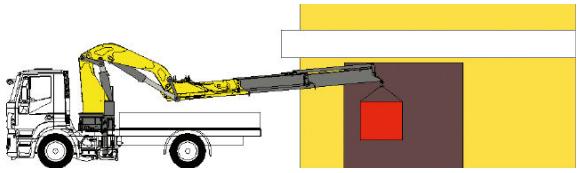

HTSS structure — High Tensile Strength Steel

The entire high-strength steel structure thanks to an advanced FEM engineering process, develops an extraordinarily light and performing crane structure. In the perfect balance between maximum performance and operational safety.

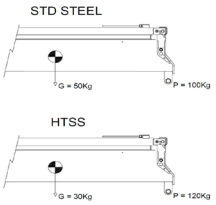

PJM control — Power Jib Monitoring

The PJM system guarantees to operate with the maximum performance in every working condition thanks to a dynamic variation of the maximum pressure according to the crane arm angles.

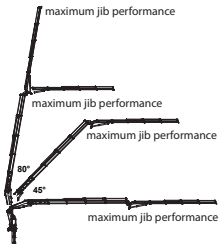

RES 2.0 structure — Rotation Endless System 2.0

Rotating system with bearing and double gearbox, equipped with clearance adjusting system with eccentric shaft.
It provides the perfect transmission of the rotation with the bearing.

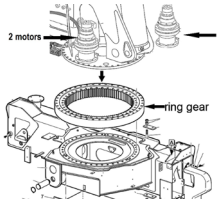

WLC control — Winch Linear Control

The winch linear electronic control allows pulling the rope according to the working angle of the crane and the JIB .
It optimize the load control and makes every movement easier and safer.

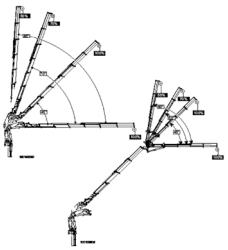

CMS 3.0 control — Crane Monitoring System 3.0

Crane stability control system TES2-TES3, with safety and overload controls medium high-range crane and HPVE lifting speed management. Active control on 4-8 working areas according to the model and vehicle stability requirements.

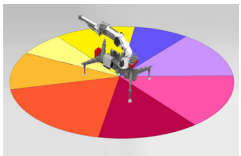

CRC 4.0 control — COPMA ® Remote Connectivity 4.0

COPMA® Remote Connectivity 4.0 to the crane.
Two-way communication by GPRS for real-time diagnosis and remote real-time parameter setting and/or adjustment.

950 TOP RANGE

Load Charts

4 extensions

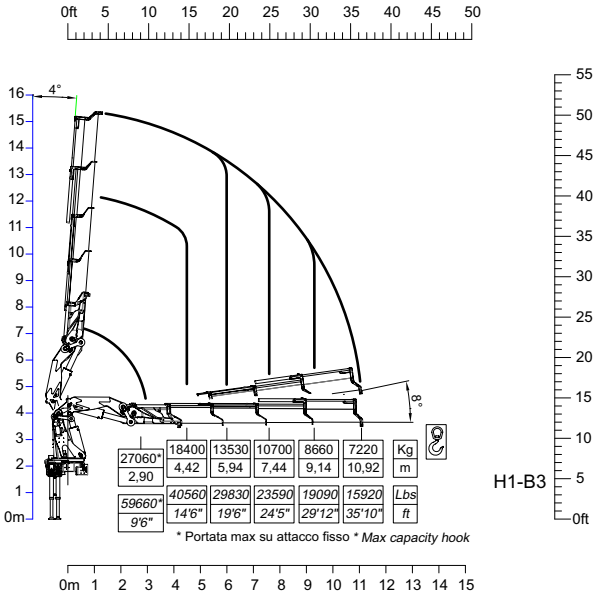

5 extensions

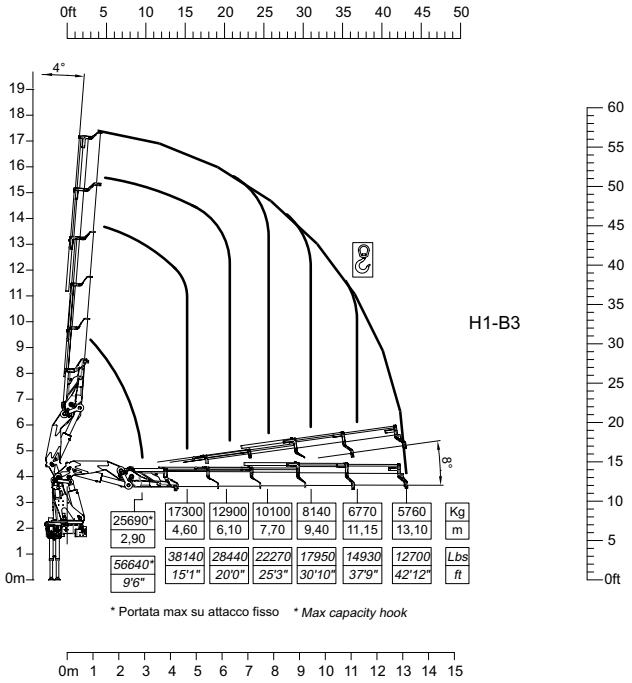

6 extensions

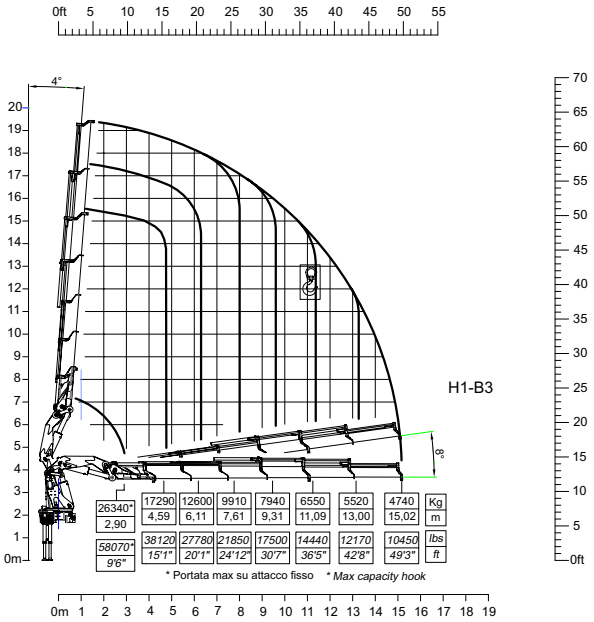

7 extensions

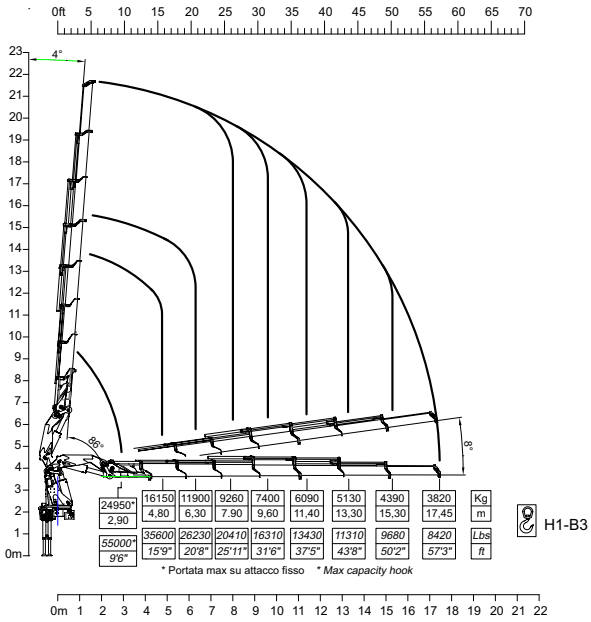

8 extensions

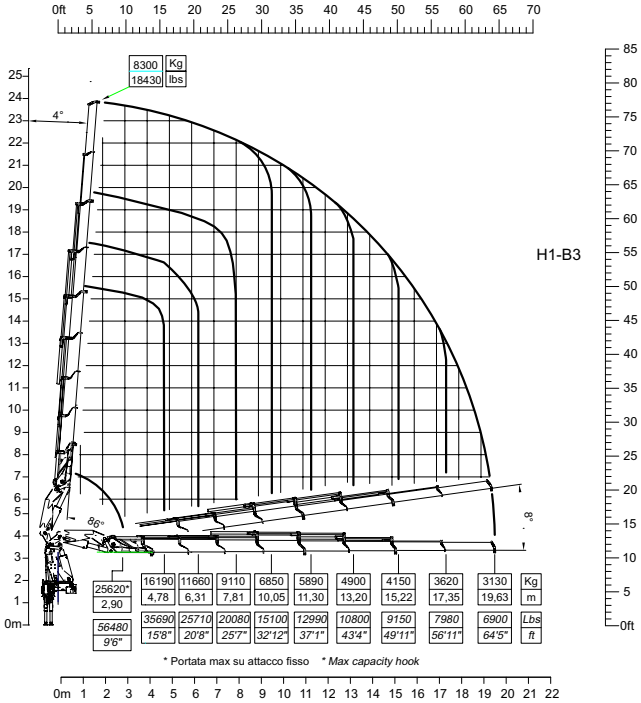

9 extensions

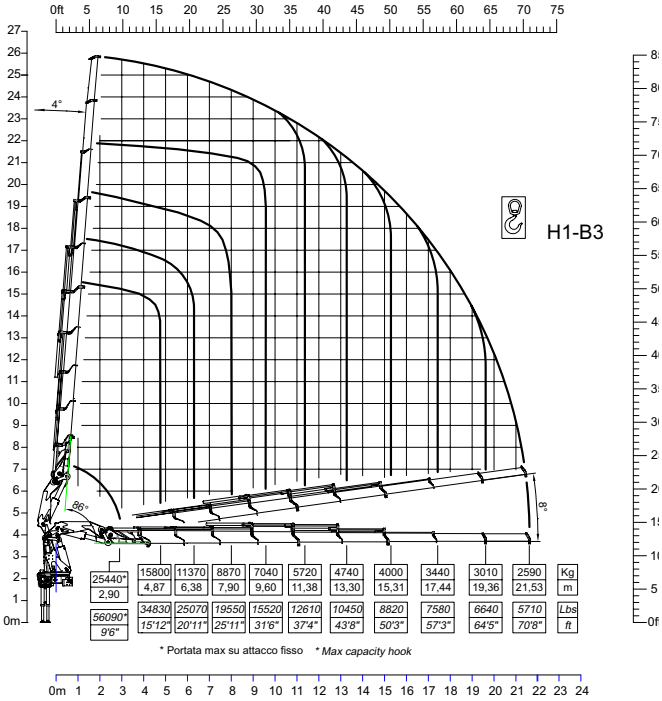

950.6 + J4

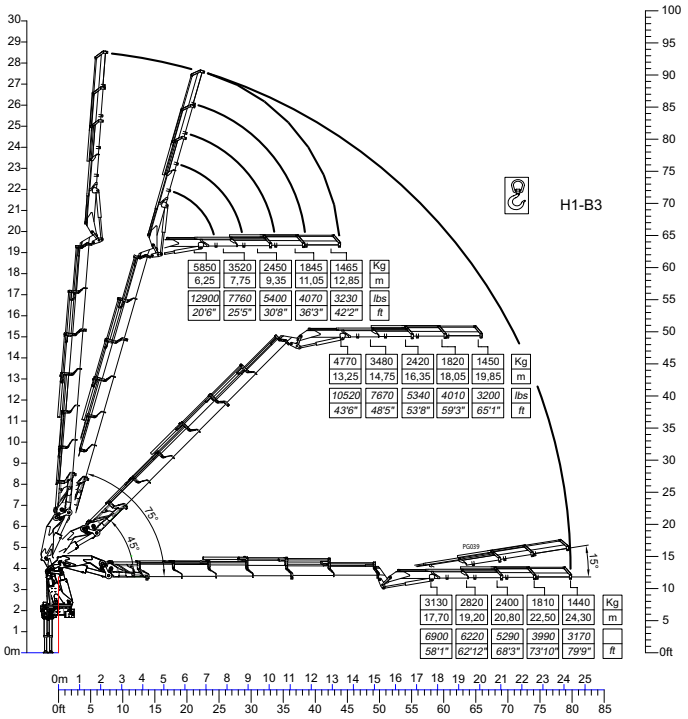

* Note:
Technical features are not binding. The company reserves itself the right to any modification without notice

950.6 + J6

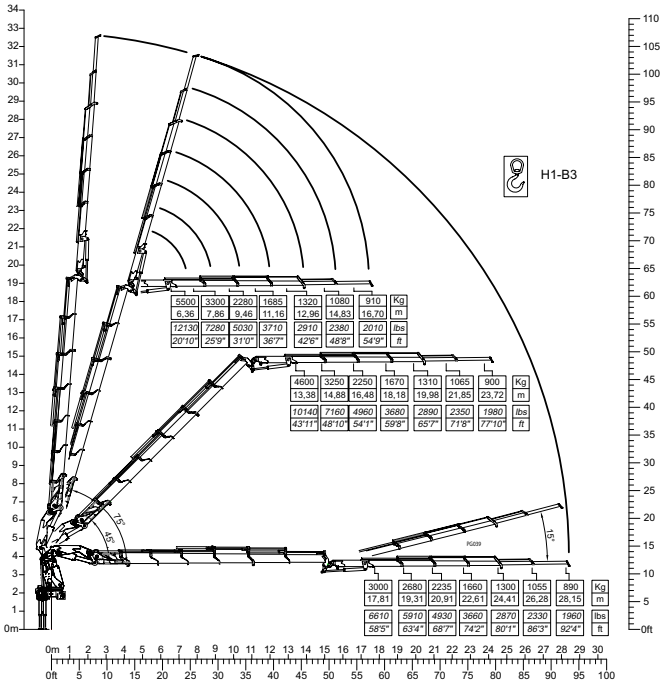

950.8 + J4

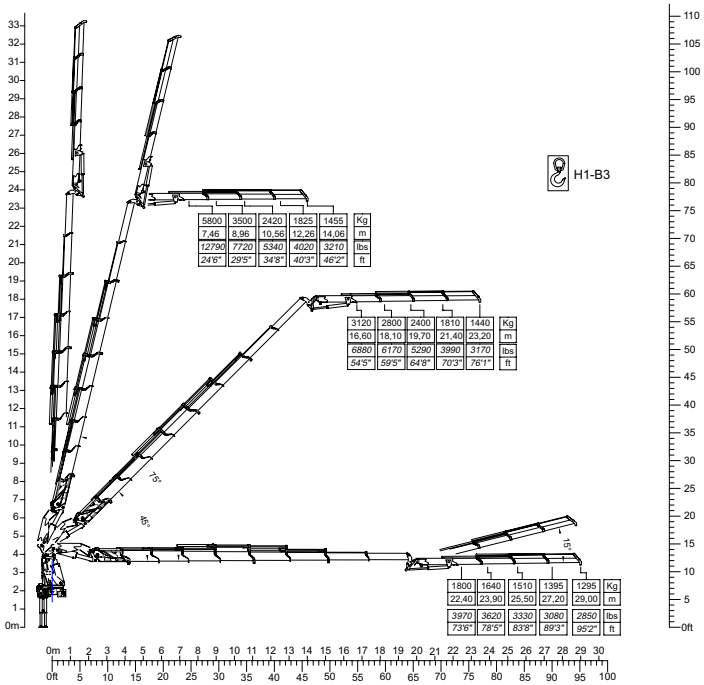

950.8 + J6

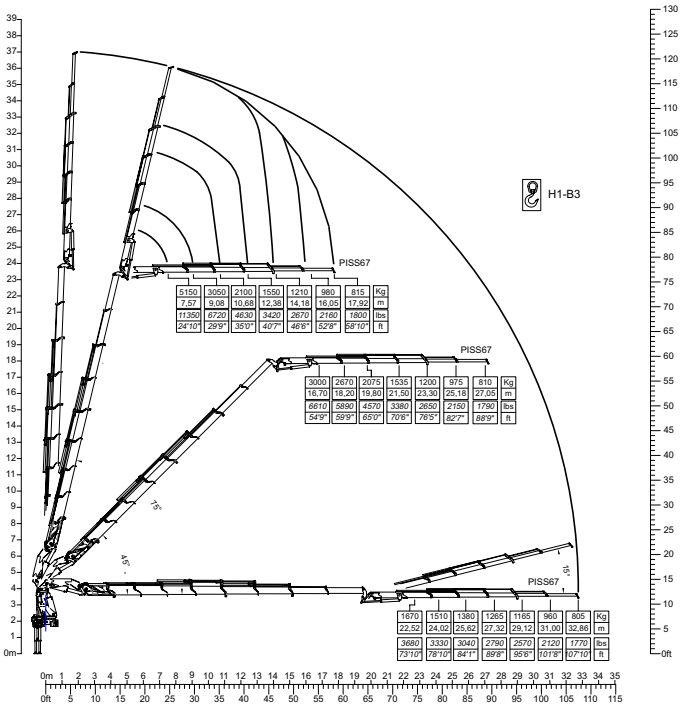

950 TOP RANGE

Crane Dimensions

back cabin left

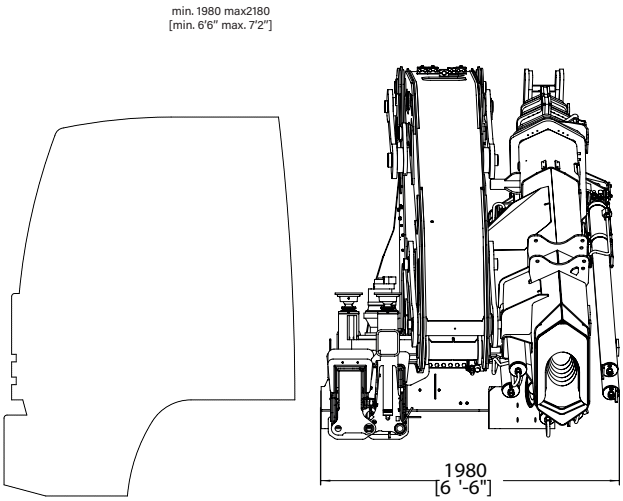

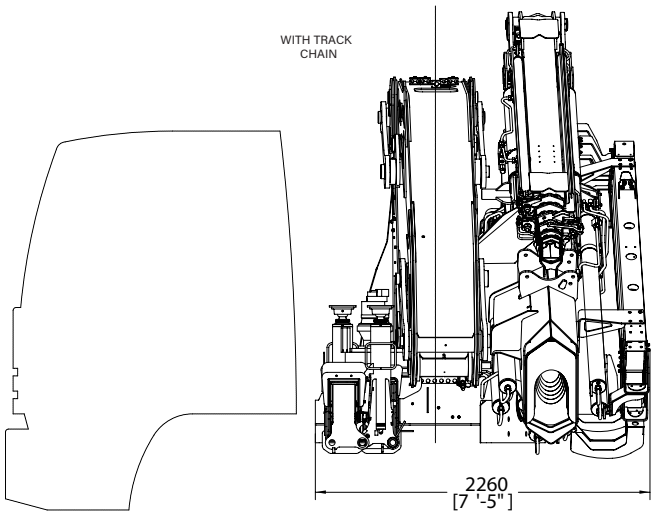

rear truck

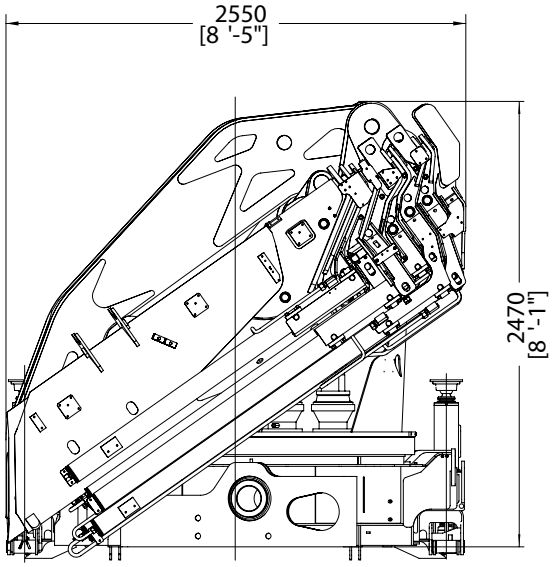

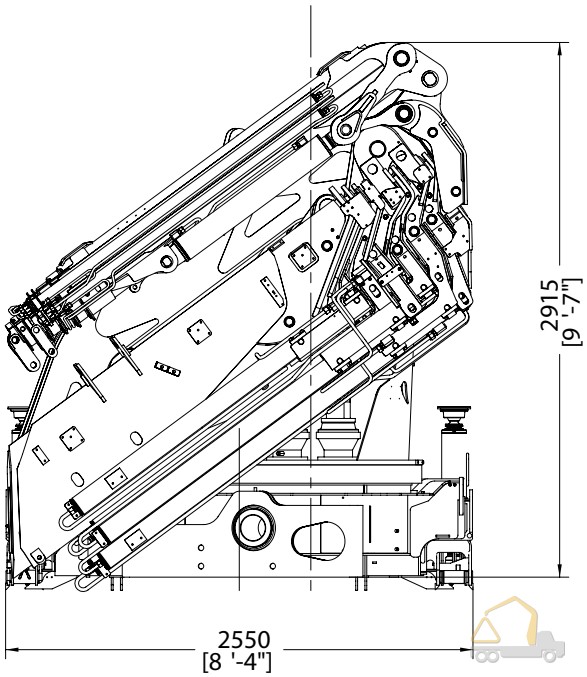

operational

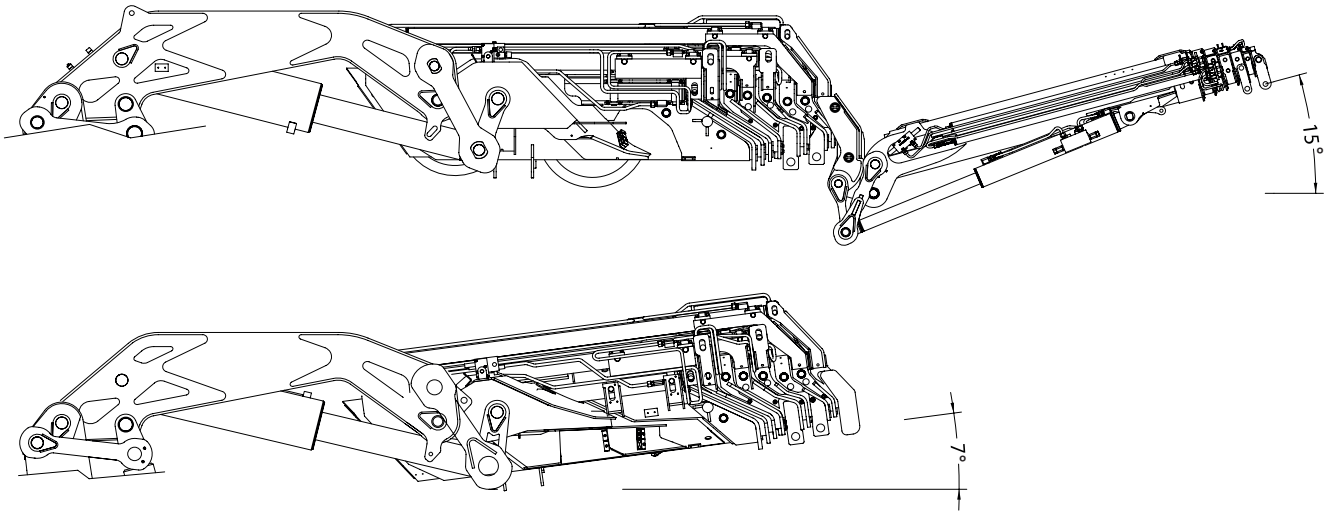

extended outriggers

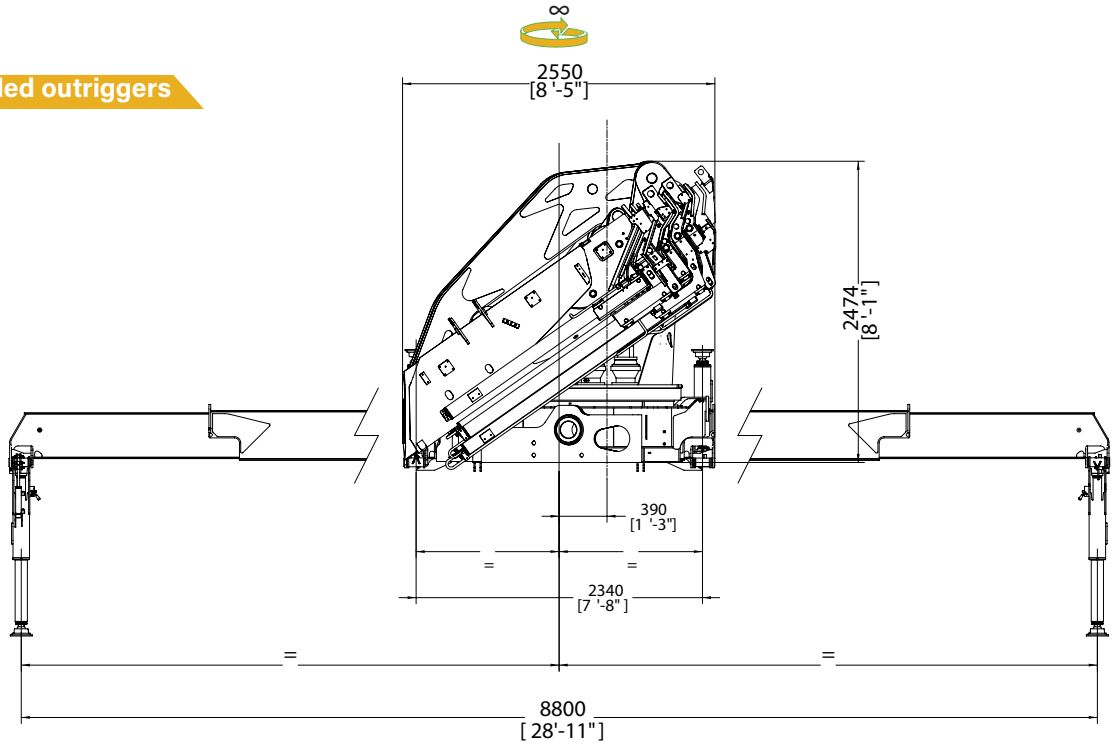

* Note:
Technical features are not binding.
The company reserves itself the right to any modification without notice

950 TOP RANGE

Technical Data

summarized data

	kN.m	bar	l/min	kg	°	mm	mm	mm	mm
950.4	805	345	80	8370	∞	2550	1980	1980	8800
950.5	781	345	80	8795	∞	2550	1980	1980	8800
950.6	768	345	80	9055	∞	2550	1980	1980	8800
950.6J4	768	345	80	9855	∞	2550	2160	2915	8800
950.6j6	768	345	80	9975	∞	2550	2160	2915	8800
950.7	760	345	80	9400	∞	2550	1980	2470	8800
950.8	747	345	80	9520	∞	2525	1980	2470	8800
950.8j4	747	345	80	10305	∞	2550	2160	2915	8800
950.8j6	747	345	80	10425	∞	2550	2160	2915	8800
950.9	742	345	80	9700	∞	2550	1980	2470	8800

	lbs	psi	gal/min	lbs	°	ft/inc	ft/inc	ft/inc	ft/inc
950.4	593885	5003	21	19140	∞	8′4″	6′6″	8′1″	28′11″
950.5	575298	5003	21	19390	∞	8′4″	6′6″	8′1″	28′11″
950.6	566447	5003	21	19960	∞	8′4″	6′6″	8′1″	28′11″
950.6J4	566447	5003	21	21730	∞	8′4″	7′5″	9′7″	28′11″
950.6j6	566447	5003	21	21990	∞	8′4″	7′5″	9′7″	28′11″
950.7	560547	5003	21	20720	∞	8′4″	6′6″	8′1″	28′11″
950.8	550811	5003	21	20990	∞	8′4″	6′6″	8′1″	28′11″
950.8j4	550811	5003	21	22720	∞	8′4″	7′5″	9′7″	28′11″
950.8j6	550811	5003	21	22980	∞	8′4″	7′5″	9′7″	28′11″
950.9	547344	5003	21	21380	∞	8′4″	6′6″	8′1″	28′11″

technical data

Max. lifting moment	805 kNm	593885 ft.lbs
Max. hydraulic outreach	21.65 m	71′0″
Slewing angle	∞	∞
Slewing torque	8200 kNm	59320 ft.lbs
Stabilizer spread	8.80 mt	28′11″
Fitting space required (min./max)	1.98 m/2.26 m	6′6″/7′5″
Width folded	2,55 m	8′5″
Max. operating pressure	345 bar	5003 psi
Recommended pump capacity	80 l/min	21 US gal./min
Dead weight (vers. 4)	8370 kg	19140 lbs

* Note:
Technical features are not binding. The company reserves itself the right to any modification without notice

SUPERIOR RELIABILITY FOR EVERY OPERATOR

COPMA 950

knuckle boom cranes

Powerful Synergies

CPS GROUP S.P.A.
281 Via Emilia , Castel Bolognese (RA) , 48014
Italy

T +39 0546 653 711
sales.cpsgroup@cps-group.com
service.cpsgroup@cps-group.com

cps-group.com

UNICERT
ISO 9001:2008